Tracy Rural County
Fire Protection District

Board of Directors
Pete Reece
John Vieira
Jeff Ramsey
Matt Kopinski
Craig Miller

Clerk of the Board
Raychel Jackson

Board of Directors – Regular Meeting Agenda
Tuesday, February 14, 2023 at 2:00 PM PST

Join Zoom Meeting
https://us06web.zoom.us/j/87549939981?pwd=UURSRlkxOERoRUJDejIjTkdvOW9rQT09
Call In Number: 1 (669) 900 6833
Meeting ID: 875 4993 9981
Passcode: 667641

Location: 835 N. Central Avenue
Tracy, CA 95376
2nd Floor

Notice to the Public: Pursuant to Assembly Bill 361, this meeting will be conducted via teleconference

1. Roll Call and Pledge of Allegiance

2. Public Comment

Please, give your name, entity (if any), and address as well as what agenda item you wish to speak about to the Clerk of the Board so that your comments may be heard at the appropriate time. Comments must be limited to 3 minutes.

3. Consent Calendar

3.1 Adoption of the February 14, 2023 Agenda
3.2 Approval of the January 10, 2023 Minutes
3.3 Approval of February Warrant List
3.4 January Monthly Financials

4. Regular Agenda

4.1 Approve Fiscal Year 2021 / 2022 Audit Report from Auditors Bloomberg & Griffin
4.2 Approve by Resolution Tracy Rural County Fire Protection District's Records Retention Policy
4.3 Receive Updated Information Regarding Station Maintenance Issues
4.4 Receive Updated Information Regarding Solar Project at Station 93

Mailing address: 793 S. Tracy Blvd. #298, Tracy, CA 95376 (209) 834-7269 www.tracyruralfire.org

5. Committee Reports

5.1 JPA Representative Report

6. Informational Update

6.1 Fire Chief's Update

7. Public Comment

For any items not on the agenda.

8. Board Member Comment

For any items not on the agenda and requests for future agenda items. No action will be taken on any questions or matters raised by the Board at this time.

9. Closed Session

9.1 Consult with Legal Counsel – Existing Litigation (*Tracy Rural Fire District v. San Joaquin County,* San Joaquin Superior Court Case No. 2020-9831). (California Government Code section 54956.9). one case.

9.2 Consult with Legal Counsel – Existing Litigation (*Tracy Rural Fire District v. San Joaquin Local Area Formation Commission*, San Joaquin Superior Court Case No. 2019-9687). (California Government Code section 54956.9). one case.

9.3 Consult with Legal Counsel – Existing Litigation (*Garcia, et al. v. Tracy Rural Fire District., Case No. STK-CV-UBC-2022-2826*). (California Government Code section 54956.9). one case.

10. Adjournment until Next Regular Session – March 14, 2022

Compliance with the Americans with Disabilities Act (US Code Title 42) – Assistance for Those with Disabilities: If you have a disability and need accommodation to participate in the meeting, please contact the Administration Office (209-834-7269) or email (raychel.jackson@tracyruralfire.org) at least 72 hours prior to the meeting to inform us of your needs and to determine if accommodation is feasible.

Tracy Rural County
Fire Protection District

Board of Directors – Regular Meeting Minutes
Tuesday, January 10, 2023
2:00 PM

1. Roll Call and Pledge of Allegiance

Chairman Reece called the meeting to order at 2:01 pm. All Directors present.

2. Public Comment

No Public Comment.

3. Consent Calendar

3.1 Adoption of the January 10, 2023 Agenda
3.2 Approval of the January 3, 2023 Special Minutes
3.3 Approval of January Warrant List
3.4 December Monthly Financials
3.5 Acknowledge Oath Administered to John Vieira

- Motion was made by Vice-Chair Ramsey, seconded by Director Miller to accept Consent Calendar. Motion passed unanimously.

4. Regular Agenda

4.1 Receive Updated Information Regarding the Development Impact Fees from the City of Tracy

- Presentation was provided by Veronica Child, City of Tracy and Joel Nagamine, Harris & Associates.

4.2 Receive Mid-Year Budget Report for Fiscal Year 2022-2023

- Motion was made by Director Kopinski, seconded by Director Vieira to accept the Mid-Year Budget Report for Fiscal Year 2022-2023. Motion passed unanimously.

4.3 Receive Updated Information Regarding Station Maintenance Issues

- No Action Taken.

4.4 Discuss Acquisition of New Equipment for New Engine 93

- Motion was made by Director Kopinski, seconded by Director Vieira to approve $141,691.42 for purchase of New Equipment for New Engine 93. Motion passed unanimously.

5. Committee Reports

5.1 JPA Representative Report

- Vice Chair Ramsey provided a report from the December 20, 2022 JPA Regular Board Meeting – board approved to amend the equipment replacement plan and to purchase a 2022 Chevrolet 1500 4x4 pickup truck in an amount not to exceed $60,000.00.

6. Informational Update

6.1 Fire Chief's Update

- Chief Bradley provided the monthly report based on the Fire Chief Update dated January 10, 2023, that was provided to the Board of Directors and staff at the meeting.

7. Public Comment

No Public Comment.

8. Board Member Comment

Director Kopinski wishes everyone a Happy New Year.

9. Closed Session

No Action Taken.

10. Meeting Adjournment at 3:47 pm.

Raychel Jackson

Raychel Jackson, Clerk of the Board

January 23, 2023

GENERAL OPERATING FUND	AMOUNT	ACCOUNT	VENDOR #
PETE REECE 30421 KOSTER ROAD TRACY, CA 95304	$ 400.00	6226010900	. 0000010849
MATT KOPINSKI 33969 S. KOSTER ROAD TRACY, CA 95304	$ -	6226010900	. 0000101809
CRAIG MILLER 5336 W. DURHAM FERRY ROAD Tracy, CA 95304	$ 300.00	6226010900	. 0000105820
JEFF RAMSEY 27722 S. Bird Road TRACY, CA 95304	$ -	6226010900	0000098549
JOHN VIEIRA 19700 SOUTH LAMMERS ROAD TRACY, CA 95304	$ 100.00	6226010900	. 0000010852
BOWMAN & BERRETH, LLP 1820 WEST KETTLEMAN LANE, SUITE F LODI, CA 95242	$ 1,174.05 $ - $ 3,080.80	6221005100 6221005120 6221005130	. 0000078394 GOVERNANCE Litigation
Total	$ 4,254.85		
Reed Smith LLP 101 Second Street, Suite 1800 San Francisco, CA 94105-3659	$ 9,843.72	6221005130	. 0000042598
Blomberg & Griffin 1031 N California Street Stockton, CA 95202	$ 8,245.00	6221005200	. 0000065007
TOTAL FOR GENERAL OPERATING FUND	**$ 23,143.57**		

CAO RESERVE FUND 49591	AMOUNT	ACCOUNT	VENDOR #
Community First National Bank 215 Seth Child Rd. Manhattan, KS 66502		6331000100	. 0000102922
TOTAL CAO FUND 49591	$ -		

SIGNATURES OF BOARD MEMBERS

_____
PETE REECE, CHAIR

_____
JOHN VIEIRA, DIRECTOR

_____
MATT KOPINSKI, DIRECTOR

_____
JEFF RAMSEY, VICE CHAIR

_____
CRAIG MILLER, DIRECTOR

PAID Monthly Expenses - Bank of Stockton
TRF Operating Account

Description	Date Paid	Amt. Due
PG&E station 3	2/6/2023	$ 1,091.42
PG&E station 4	2/6/2023	$ 1,377.12
PG&E station 5	2/6/2023	$ 1,867.05
PG&E Banta	2/6/2023	$ 24.99
EcoWater System	2/6/2023	$ 57.00
ProTech - Station #5	2/1/2023	$ 70.00
ProTech - Station #5 - service call	1/31/2023	$ 614.61
Patriot Pest Control	2/6/2023	$ 238.00
Delta Disposal	2/6/2023	$ 315.22
City of Tracy - Station 5	1/16/2023	$ 330.14
ATT - Station lines		
CalPERS	2/6/2023	$ 152.87
Amazon - office supplies	1/20/2023	$ 210.83
McAfee Subscription	1/31/2023	$ 89.99
USPS	1/30/2023	$ 63.00
Staples	1/27/2023	$ 117.97
CSDA - books	1/18/2023	$ 25.41
DMV - copy of titles	2/7/2023	$ 76.74
Petrulakis Law & Advocacy, APC	1/26/2023	$ 18,521.00
Jeff Ramsey - Monthly Stipend	2/15/2023	$ 400.00
Matt Kopinski - Monthly Stipend	2/15/2023	$ 500.00
Special District Financial District	2/15/2023	$ 4,593.75
ATT - District Phone Upgrade	2/5/2023	$ 1,613.50
ATT - District Phone	2/5/2023	$ 168.85
ATT - District Phone	1/24/2023	$ 370.96

Total Paid
$ 32,890.42

PAID Monthly Expenses - Bank of Stockton
TRF Capital Outlay Account

Description	Date Paid	Amt. Due
Melo Construction - 94 paint	1/16/2022	$ 9,419.20
Melo Construction - 94 dry rot, roof sheathing replacement	1/26/2023	$ 8,739.12
Nor Cal Plumbing 93 air reel install	1/27/2023	$ 13,000.00
Accuflow Plumping - garbage disposal	2/1/2023	$ 180.00
U.S. Security Supply - 95 locks	2/2/2023	$ 3,519.83
Air Exchange - Plymovent - 93	2/6/2023	$ 706.00
JRC Custom - 93 sink	2/6/2023	$ 2,489.72
JRC Custom - 93 & 94 walk thru	2/6/2023	$ 800.00
Collicutt Energy - load banks	2/6/2023	$ 7,601.18
Collicutt Energy - 95 fuel	2/6/2023	$ 3,460.53

Total Paid
$ 49,915.58

TRACY RURAL COUNTY FIRE PROTECTION DISTRICT
Balance Sheet
As of February 8, 2023

	Feb 8, 23
ASSETS	
Current Assets	
Checking/Savings	
Bank of Stockton-Capital Outlay	1,294,594.48
Bank of Stockton-Operating	1,003,114.20
Bank of Stockton-Retirement	115,047.57
Fund 49501 - Operations	135,345.89
Fund 49512 - Retirement Buyout	18,893.92
Fund 49515 - Fire Facility Fees	470,448.44
Fund 49519 - Emergency Reserve	2,023,803.00
Fund 49591 - Capital Outlay Res	503,431.33
Total Checking/Savings	5,564,678.83
Total Current Assets	5,564,678.83
TOTAL ASSETS	**5,564,678.83**
LIABILITIES & EQUITY	0.00

Tracy Rural County
Fire Protection District

Agenda Item 4.1

STAFF REPORT

Meeting: **Regular Meeting**
Date: **February 14, 2023**
To: **Board of Directors**
Prepared by: **Raychel Jackson, District Clerk**
Approved by: **Pete Reece, Chairperson**

Re: **Approval of FY 21/22 Audit by Blomberg & Griffin**

RECOMMENDATION

Action Item __X___ Non-Action Item_____

It is recommended that the District Board approve the attached Financial Statements and Independent Auditor's Report dated June 30, 2022 from Blomberg & Griffin.

BACKGROUND

On July 13, 2022, staff initiated the preparation of the annual independent financial audit. The draft audit was completed on January 27, 2023 by Blomberg & Griffin. The goal of a financial audit is to provide users with a reasonable assurance from an independent source that the information presented in the statements is reliable.

The audit at page 1 contains the auditor's opinion. It reads as follows:

> In our opinion, the financial statements referred to above present fairly, in all material respects, the respective financial position of the Tracy Rural County Fire Protection District as of June 30, 2022 and 2021, and the respective changes in financial position, and, where applicable, cash flows thereof for the years then ended in accordance with accounting principles generally accepted in the United States of America.

DISCUSSION

It is appropriate for the District Board to accept the audit at this time so it becomes a part of the formal public record.

FISCAL IMPACTS

None.

ATTACHMENTS

1. Tracy Rural Fire Protection District Financial Statements and Independent Auditor's Report dated June 30, 2022

TRACY RURAL COUNTY FIRE

PROTECTION DISTRICT

Financial Statements
and
Independent Auditor's Report

For the Fiscal Years Ended June 30, 2022 and 2021

TRACY RURAL COUNTY FIRE PROTECTION DISTRICT

Table of Contents

FINANCIAL SECTION	PAGE
Independent Auditor's Report	1-2
Basic Financial Statements:	
Government-Wide Financial Statements:	
Statement of Net Position	3
Statement of Activities	4
Fund Financial Statements:	
Balance Sheet - Governmental Funds	5-6
Reconciliation of the Governmental Funds Balance Sheet to the Statement of Net Position	7
Statement of Revenues, Expenditures, and Changes in Fund Balances-Governmental Funds	8-9
Reconciliation of the Governmental Funds Statement of Revenues, Expenditures and Changes in Fund Balances to the Statement of Activities	10
Notes to Basic Financial Statements	11-27
REQUIRED SUPPLEMENTARY INFORMATION SECTION	
Budgetary Comparison Schedule - General Fund	28-29
Schedule of Required Supplementary Information- Pension Plan	30
SUPPLEMENTARY INFORMATION SECTION	
Combining Statements – Nonmajor Funds:	
Combining Balance Sheet – Nonmajor Special Revenue Funds	31
Combining Statement of Revenues, Expenditures and Changes in Fund Balance – Nonmajor Special Revenue Funds	32

Blomberg & Griffin Accountancy Corporation
Certified Public Accountant

INDEPENDENT AUDITOR'S REPORT

To the Board of Directors
Tracy Rural County Fire Protection District
Tracy, CA

Opinions

We have audited the accompanying financial statements of the and for the years ended June 30, 2022, and 2021 and the related notes to the financial statements, which collectively comprise the Tracy Rural County Fire Protection District, basic financial statements as listed in the table of contents.

In our opinion, the financial statements referred to above present fairly, in all material respects, the respective financial position of the Tracy Rural County Fire Protection District, as of June 30, 2022 and 2021, and the respective changes in financial position and, where applicable, cash flows thereof for the years then ended in accordance with accounting principles generally accepted in the United States of America.

Basis for Opinions

We conducted our audit in accordance with auditing standards generally accepted in the United States of America and the State Controller's Minimum Audit Requirements for California Special District. Our responsibilities under those standards are further described in the Auditor's Responsibilities for the Audit of the Financial Statements section of our report. We are required to be independent of the Tracy Rural County Fire Protection District, and to meet our other ethical responsibilities, in accordance with the relevant ethical requirements relating to our audit. We believe that the audit evidence we have obtained is sufficient and appropriate to provide a basis for our audit opinions.

Responsibilities of Management for the Financial Statements

Management is responsible for the preparation and fair presentation of the financial statements in accordance with accounting principles generally accepted in the United States of America, and for the design, implementation, and maintenance of internal control relevant to the preparation and fair presentation of financial statements that are free from material misstatement, whether due to fraud or error.

In preparing the financial statements, management is required to evaluate whether there are conditions or events, considered in the aggregate, that raise substantial doubt about the Tracy Rural County Fire Protection District's ability to continue as a going concern for twelve months beyond the financial statement date, including any currently known information that may raise substantial doubt shortly thereafter.

Auditor's Responsibilities for the Audit of the Financial Statements

Our objectives are to obtain reasonable assurance about whether the financial statements as a whole are free from material misstatement, whether due to fraud or error, and to issue an auditor's report that includes our opinions. Reasonable assurance is a high level of assurance but is not absolute assurance and therefore is not a guarantee that an audit conducted in accordance with generally accepted auditing standards will always detect a material misstatement when it exists.

The risk of not detecting a material misstatement resulting from fraud is higher than for one resulting from error, as fraud may involve collusion, forgery, intentional omissions, misrepresentations, or the

1013 North California Street, Stockton, California 95202 • (209) 466-3894 • Fax (209) 466-5545

override of internal control. Misstatements are considered material if there is a substantial likelihood that, individually or in the aggregate, they would influence the judgment made by a reasonable user based on the financial statements.

In performing an audit in accordance with generally accepted auditing standards, we:

- Identify and assess the risks of material misstatement of the financial statements, whether due to fraud or error, and design and perform audit procedures responsive to those risks. Such procedures include examining, on a test basis, evidence regarding the amounts and disclosures in the financial statements.
- Obtain an understanding of internal control relevant to the audit in order to design audit procedures that are appropriate in the circumstances, but not for the purpose of expressing an opinion on the effectiveness of the Tracy Rural County Fire Protection District's internal control. Accordingly, no such opinion is expressed.
- Evaluate the appropriateness of accounting policies used and the reasonableness of significant accounting estimates made by management, as well as evaluate the overall presentation of the financial statements.
- Conclude whether, in our judgment, there are conditions or events, considered in the aggregate, that raise substantial doubt about the Tracy Rural County Fire Protection District's ability to continue as a going concern for a reasonable period of time.

We are required to communicate with those charged with governance regarding, among other matters, the planned scope and timing of the audit, significant audit findings, and certain internal control-related matters that we identified during the audit.

Other Matters
Required Supplementary Information

Accounting principles generally accepted in the United States of America require that the management's discussion and analysis, budgetary comparison schedule, and schedule of required supplementary information- Pension Plan be presented to supplement the basic financial statements. Such information, although not a part of the basic financial statements, is required by the Governmental Accounting Standards Board, who considers it to be an essential part of financial reporting for placing the basic financial statements in an appropriate operational, economic, or historical context. The Tracy Rural County Fire Protection District has not presented the Management Discussion and Analysis that accounting principles generally accepted in the United States has determined is necessary to supplement, although not required to be part of, the basic financial statements.

Our audit was conducted for the purpose of forming an opinion on the financial statements that collectively comprise the Tracy Rural County Fire Protection District's, basic financial statements. The budgetary comparison and pension plan required disclosure have not been subjected to the auditing procedures applied in the audit of the basic financial statements and, accordingly, we do not express an opinion or provide any assurance on it.

Blomberg & Griffin A.C.
Stockton, CA

November 18, 2022

TRACY RURAL COUNTY FIRE PROTECTION DISTRICT
Statement of Net Position
June 30, 2022 and 2021

	2022 Governmental Activities	2021 Governmental Activities
ASSETS		
Cash in Bank and in County Treasury-Note 3	$ 7,122,953	$ 6,822,915
Accounts Receivable	51,259	129,723
Interest Receivable	6,717	6,167
Land-Note 4	177,107	177,107
Capital Assets, Net of Accumulated Depreciation-Note 4	3,739,782	2,807,918
Deferred Outflows of Resources- Note 10	2,123,732	1,076,468
Total Assets	13,221,550	11,020,298
LIABILITIES		
Current Liabilities		
Accounts Payable	15,625	14,572
Accrued Interest	5,151	4,615
Current Portion of Long-Term Debt-Note 5	143,789	93,979
Total Current Liabilities	164,565	113,166
Long-Term Liabilities		
Capital Lease - Note 5	1,466,087	514,432
Net Pension Liability- Note 10	5,140,715	4,987,483
Deferred Inflows of Resources- Note 10	3,284,489	352,118
Total-Long Term Liabilities	9,891,291	5,854,033
Total Liabilities	10,055,856	5,967,199
NET POSITION		
Invested in Capital Assets, Net of Related Debt	2,307,013	2,376,614
Unrestricted	858,681	2,676,485
Total Net Position	$ 3,165,694	$ 5,053,099

The accompanying notes are an integral part of the financial statements.

TRACY RURAL COUNTY FIRE PROTECTION DISTRICT
Statement of Activities
For the Years Ended June 30, 2022 and 2021

	2022 Governmental Activities	2021 Governmental Activities
EXPENDITURES/EXPENSES		
Fire Protection		
Operations	$ 12,665,838	$ 7,148,024
Depreciation	222,405	150,834
Total Expenditures/Expenses	12,888,243	7,298,858
PROGRAM REVENUES		
Grant Income	560,270	-
Charges for Services	18,378	4,396
Net Program Expenses	12,309,595	7,294,462
GENERAL REVENUES		
Property Taxes-Note 6	9,693,110	8,877,130
Homeowner Tax	52,671	50,597
Investment Earnings	12,700	25,150
Interest Expense	(18,993)	(27,782)
Rental Income	22,208	24,625
Sale of Assets	632,909	-
Miscellaneous Income	27,585	80,497
Total General Revenues	10,422,190	9,030,217
Changes in Net Position	(1,887,405)	1,735,755
Net Position - Beginning of Year	5,053,099	3,317,344
Net Position - End of Year	$ 3,165,694	$ 5,053,099

The accompanying notes are an integral part of the financial statements.

TRACY RURAL COUNTY FIRE PROTECTION DISTRICT
Balance Sheet
Governmental Funds
June 30, 2022

ASSETS	General Fund	Capital Outlay Fund	Nonmajor Governmental Funds	2022 Total Governmental Funds
Cash in Hand and in Cash Treasury-Note 3	$ 4,730,278	$ 1,920,458	$ 472,218	$ 7,122,954
Accounts Receivable	51,259	-	-	51,259
Interest Receivable	3,432	2,680	605	6,717
Total Assets	$ 4,784,969	$ 1,923,138	$ 472,823	$ 7,180,930
LIABILITIES and FUND BALANCES				
Liabilities				
Accounts Payable	$ 15,625	$ -	$ -	$ 15,625
Accrued Interest	-	5,151	-	5,151
Total Liabilities	15,625	5,151	-	20,776
FUND BALANCES				
Assigned to:				
Acquisition of Capital Assets-Note 2	-	1,917,987	-	1,917,987
Other Purposes-Note 2	-	-	472,823	472,823
Unassigned-Note 2	4,769,344	-	-	4,769,344
Total Fund Balances	4,769,344	1,917,987	472,823	7,160,154
Total Liabilities and Fund Balances	$ 4,784,969	$ 1,923,138	$ 472,823	$ 7,180,930

The accompanying notes are an integral part of the financial statements.

TRACY RURAL COUNTY FIRE PROTECTION DISTRICT
Balance Sheet
Governmental Funds
June 30, 2021

ASSETS	General Fund	Capital Outlay Fund	Nonmajor Governmental Funds	2021 Total Governmental Funds
Cash on Hand and in Cash Treasury-Note 3	$ 4,199,964	$ 1,970,557	$ 652,394	$ 6,822,915
Accounts Receivable	129,723	-	-	129,723
Interest Receivable	3,609	2,168	390	6,167
Total Assets	$ 4,333,296	$ 1,972,725	$ 652,784	$ 6,958,805
LIABILITIES and FUND BALANCES				
Liabilities				
Accounts Payable	$ 14,572	$ -	$ -	$ 14,572
Accrued Interest		4,615		4,615
Total Liabilities	14,572	4,615	-	19,187
FUND BALANCES				
Assigned to:				
Acquisition of Capital Assets-Note 2	-	1,968,110	-	1,968,110
Other Purposes-Note 2	-	-	652,784	652,784
Unassigned-Note 2	4,318,724	-	-	4,318,724
Total Fund Balances	4,318,724	1,968,110	652,784	6,939,618
Total Liabilities and Fund Balances	$ 4,333,296	$ 1,972,725	$ 652,784	$ 6,958,805

The accompanying notes are an integral part of the financial statements.

TRACY RURAL COUNTY FIRE PROTECTION DISTRICT
Reconciliation of the Governmental Funds Balance Sheet to the
Statement of Net Position
June 30, 2022 and 2021

	2022	2021
Total Fund Balances-Governmental Funds	$ 7,160,154	$ 6,939,618
Amounts reported for governmental activities in the statement of net position are different because:		
Capital assets: In governmental funds, only current assets are reported In the statement of net position, all assets are reported, including capital assets and accumulated depreciation.		
Capital Assets at Historical Cost:	6,315,088	5,592,748
Accumulated Depreciation	(2,398,199)	(2,607,723)
Pension Deferred Charges	2,123,732	1,076,468
Net Pension Liability	(5,140,715)	(4,987,483)
Pension Deferred Credits	(3,284,489)	(352,118)
In governmental funds, the capital lease payable amounts are not reported as liability. However, capital lease payable amounts are reported as liability in the statement of net position.		
Capital Lease Payable	(1,609,877)	(608,411)
Net Position of Governmental Activities	$ 3,165,694	$ 5,053,099

The accompanying notes are an integral part of the financial statements.

TRACY RURAL COUNTY FIRE PROTECTION DISTRICT
Statement of Revenues, Expenditures, and Changes in Fund Balances
Governmental Funds
For the Fiscal Year Ended June 30, 2022

REVENUES	General Fund	Capital Outlay Fund	Nonmajor Governmental Funds	Total Governmental Funds
Property Taxes-Note 6	$ 8,112,842	$ -	$ -	$ 8,112,842
Property Assessments-Note 6	1,580,268	-	-	1,580,268
State Property Taxes-Note 6	52,671	-	-	52,671
Program Revenues	560,270	-	18,378	578,648
Rent Income	4,480	17,728	-	22,208
Miscellaneous Income	27,585	-	-	27,585
Interest	5,753	5,286	1,661	12,700
Total Revenues	10,343,869	23,014	20,039	10,386,922
EXPENDITURES				
Fire Protection				
Fire Services-Note 13	9,527,364	-	-	9,527,364
Insurance	32,667	-	-	32,667
Tax Administration Service Charge	148,775	-	-	148,775
Miscellaneous	296,761	99,678	-	396,439
Employee Benefits (PERS)	522,252	-	-	522,252
Capital Outlay-Note 4	-	1,162,591	-	1,162,591
Debt Service:				
Principal-Note 5	-	93,979	-	93,979
Interest	-	18,993	-	18,993
Total Expenditures	10,527,819	1,375,241	-	11,903,060
Excess of Revenues Over (under) Expenditures	(183,950)	(1,352,227)	20,039	(1,516,138)
OTHER FINANCIAL SOURCES (USES)				
Proceeds from Sale of Assets	-	641,231	-	641,231
Proceeds from Capital Lease	-	1,095,443	-	1,095,443
Operating Transfers In-Note 8	634,570	-	-	634,570
Operating Transfers Out-Note 8	-	(434,570)	(200,000)	(634,570)
Total Other Financing Sources (Uses)	634,570	1,302,104	(200,000)	1,736,674
Excess of Revenues and Other Financing Sources Over Expenditures and Other Uses	450,620	(50,123)	(179,961)	220,536
Fund Balances, July 01, 2021	4,318,724	1,968,110	652,784	6,939,618
Fund Balance, June 30, 2022	$ 4,769,344	$ 1,917,987	$ 472,823	$ 7,160,154

The accompanying notes are an integral part of the financial statements.

TRACY RURAL COUNTY FIRE PROTECTION DISTRICT
Statement of Revenues, Expenditures, and Changes in Fund Balances
Governmental Funds
For the Fiscal Year Ended June 30, 2021

	General Fund	Capital Outlay Fund	Nonmajor Governmental Funds	Total Governmental Funds
REVENUES				
Property Taxes-Note 6	$ 7,390,656	$ -	$ -	$ 7,390,656
Property Assessments-Note 6	1,486,473	-	-	1,486,473
State Property Taxes-Note 6	50,597	-	-	50,597
Program Revenues	-	-	4,396	4,396
Rent Income	-	24,625	-	24,625
Miscellaneous Income	80,498	-	-	80,498
Interest	9,556	13,378	2,216	25,150
Total Revenues	9,017,780	38,003	6,612	9,062,395
EXPENDITURES				
Fire Protection				
Fire Services-Note 13	5,881,815	-	-	5,881,815
Insurance	22,326	-	-	22,326
Tax Administration Service Charge	125,069	-	-	125,069
Miscellaneous	317,716	81,525	-	399,241
Employee Benefits (PERS)	507,293	-	127,332	634,625
Capital Outlay-Note 4	33,116	697,682	-	730,798
Debt Service:				
Principal-Note 5	-	89,271	-	89,271
Interest	-	27,782	-	27,782
Total Expenditures	6,887,335	896,260	127,332	7,910,927
Excess of Revenues Over (under) Expenditures	2,130,445	(858,257)	(120,720)	1,151,468
OTHER FINANCIAL SOURCES (USES)				
Loan Proceeds	-	697,682	-	697,682
Operating Transfers In-Note 8	309,825	-	200,000	509,825
Operating Transfers Out-Note 8	-	(509,825)	-	(509,825)
Total Other Financing Sources (Uses)	309,825	187,857	200,000	697,682
Excess of Revenues and Other Financing Sources Over Expenditures and Other Uses	2,440,270	(670,400)	79,280	1,849,150
Fund Balances, July 1, 2020	1,878,454	2,638,510	573,504	5,090,468
Fund Balance, June 30, 2021	$ 4,318,724	$ 1,968,110	$ 652,784	$ 6,939,618

The accompanying notes are an integral part of the financial statements.

TRACY RURAL COUNTY FIRE PROTECTION DISTRICT

Reconciliation of the Governmental Funds Statement of Revenues, Expenditures,
And Changes in Fund Balances to the Statement of Activities
For the Fiscal Years Ended June 30, 2022 and 2021

	2022	2021
Excess (Deficiency) of Revenues and Other Financing Sources Over Expenditures and Other Uses	$ 220,536	$ 1,849,150
Amounts reported for governmental activities in the statement of activities are different from amounts reported in governmental funds because:		
Capital Outlay: In governmental funds, the costs of capital outlay are reported as expenditures in the period when the assets are acquired. In the statement of activities costs of capital assets are allocated over their estimated useful lives as depreciation expense. The difference between capital outlay expenditures and depreciation expense for the period is:		
Expenditures for Capital Outlay	1,162,591	730,798
Depreciation Expense	(222,405)	(150,834)
Difference in Asset Book value	(8,322)	-
Debt Service: In governmental funds, proceeds from long-term debt are reported as other sources and repayments are reported as expenditures. In the government-wide statements, repayments of long-term debt are reported as reductions of liabilities.		
Proceeds from Long-Term Debt	(1,095,444)	(697,682)
Principle Payment of Long-Term Debt	93,979	89,271
Changes in Employee Benefits expense did not require the use of current financial resources or meet revenue recognition criteria in the Governmental Funds Financial Statements and therefore are not reported in governmental funds.	(2,038,340)	(84,948)
Changes in Net Position-Governmental Activities	$ (1,887,405)	$ 1,735,755

The accompanying notes are an integral part of the financial statements.

NOTE 1 SUMMARY OF SIGNIFICANT ACCOUNTING POLICIES:

A. Financial Reporting Entity

The Tracy Rural County Fire Protection District was established in 1945 to protect the greater Tracy Region that encompassed over 200 square miles. The rural fire department was comprised of volunteers who manned four fire stations.

During 1999 the Tracy Rural County Fire Protection District ("District") and City of Tracy ("City") agreed to consolidate fire protection services into one Fire Department. On September 7, 1999, the District and the City entered into a joint exercise of powers agreement ("JPA Agreement") that created the South County Fire Authority ("Authority"), a public entity separate and apart from the District and the City. The operational date of this agreement is September 16, 1999.

Effective July 1, 2018 the authority (old JPA) was dissolved, and a new joint powers agreement formed the South San Joaquin County Fire Authority (new JPA). See Note 7 for additional details.

The District's governing authority consists of five elected officials who, together, constitute the Board of Directors. The Government Accounting Standards Board established criteria for determining which organizations should be included in a governmental reporting entity. The focal point for preparing financial statements of a financial reporting entity is the *primary government.* The identification of a financial reporting entity is built around the concept of financial accountability. That is, if a primary government is financially accountable for another entity, that entity's financial statements must be included in the financial statements of the reporting entity. Thus, the *financial reporting entity* consists of the *primary government* and its *component units. Primary government* is defined as a state, general purpose local or special purpose local government that has a separately elected governing body, is legally separate, and is fiscally independent of other state or local governments. *Component units* are defined as legally separate organizations for which the elected officials of the primary government are financially accountable. In addition, a component unit can be another organization for which the nature and significance of its relationship with a primary government is such that the exclusion would cause the reporting entity's financial statements to be misleading or incomplete. Based on these criteria and definitions, the District is the primary government and there are no material potential component units which should be included with the accompanying financial statements of the District. The District's basic financial statements do not include operations of the associated governmental agencies involved in the JPA Agreement, namely the Authority or the City.

NOTE 1 SUMMARY OF SIGNIFICANT ACCOUNTING POLICIES (Continued):

B. Accounting Policies

The District accounts for its financial transactions in accordance with policies and procedures of the California State Controller's Minimum Audit Requirements and Reporting Guidelines for Special Districts. The accounting policies of the District conform to generally accepted accounting principles as prescribed by the Governmental Accounting Standards Board (GASB) and the American Institute of Certified Public Accountants (AICPA).

Basis of Presentation:

Government – Wide Financial Statements:

The statement of net position and statement of activities display information about the reporting government as a whole. They include all funds of the reporting entity except for fiduciary funds. The statements distinguish between governmental and business-type activities. Governmental activities generally are financed through taxes, intergovernmental revenues, and other non-exchange revenues. Business- type activities are financed in whole or in part by fees charged to external parties for goods or services. The District does not have business-type or fiduciary funds.

Fund Financial Statements:

Fund financial statements of the reporting entity are organized into funds, each of which are considered to be separate accounting entities. Each fund is accounted for by providing a separate set of self-balancing accounts that constitute its assets, liabilities, fund equity, revenues, and expenditure/expenses. Funds are organized into three major categories: governmental, proprietary, and fiduciary. An emphasis is placed on major funds within the governmental and proprietary categories. A fund is considered major if it is the primary operating fund of the District or meets the following criteria:

a. Total assets, liabilities, revenues, or expenditures/expenses of that individual governmental or enterprise fund are at least ten percent of the corresponding total for all funds of the category or type.

b. Total assets, liabilities, revenues, or expenditures/expenses of the individual governmental fund or enterprise fund are at least five percent of the corresponding total for all governmental and enterprise funds combined.

NOTE 1 SUMMARY OF SIGNIFICANT ACCOUNTING POLICIES (Continued):

Major Governmental Funds:

General Fund: is the general operating fund of the District. It is used to account for all financial resources except those required to be accounted for in another funds.

Capital Outlay Fund: accounts for all resources for the acquisition of capital assets and facilities by the District. Recorded income sources include resources received from developer impact fees assessed under provisions of the California Environmental Quality Activity (CEQA), sublease rental income, and interest income.

Nonmajor Governmental Funds:

Special Reserve Fund: is funded upon the direction of the District's governing board. It was established to pay for benefits accrued to former District employees.

Fire Facility Fund: Mitigate effects of new development.

B. Measurement Focus and Basis of Accounting:

Measurement focus is a term used to describe "which" transactions are recorded within the various financial statements. Basis of accounting refers to "when" revenues and expenditures or expenses are recognized in the accounts and reported in the financial statements regardless of the measurement focus applied.

Measurement Focus:

On the statement of net position and the statement of activities, governmental activities are presented using the economic resources measurement focus as defined in item b. below.

In the governmental fund balance sheet and the statement of governmental fund revenues, expenditures, and changes in fund balances, the "current financial resources" measurement focusses or the "economic resources" measurement focus is used as appropriate.

a. The "current financial resources" measurement focus is used when accounting for all governmental funds. With this measurement focus, only current assets and current liabilities generally are included on their balance sheets. Their operating statements present sources and uses of available spendable financial resources during a given period. These funds use fund balance as their measure of available spendable financial resources at the end of the period.

NOTE 1 SUMMARY OF SIGNIFICANT ACCOUNTING POLICIES (Continued):

a. The accounting objectives of the "economic resources" measurement focus are the determination of operating income, changes in net position (or cost recovery), financial position, and cash flows. All assets and all liabilities (whether current or noncurrent) associated with the operation of these funds are reported.

Basis of Accounting:

In the statement of net position and statement of activities, governmental activities are presented using the accrual basis of accounting. Under the accrual basis of accounting, revenues are recognized when earned and expenses are recorded when the liability is incurred, or economic asset used. Revenues, expenses, gains, losses assets and liabilities resulting from exchange-like transactions are recognized when the exchange takes place.

In the governmental funds balance sheet and the statement of governmental fund revenues, expenditures, and changes in fund balances, governmental funds are presented on the modified accrual basis of accounting. Under this modified accrual basis of accounting, revenues are recognized when "measurable and available." Measurable means knowing or being able to reasonably estimate the amount. Available means collectible within the current period or soon enough thereafter to pay current liabilities. The District defines available to be within 60 days of year-end. Expenditures (including capital outlay) are recorded when the related fund liability is incurred.

C. Budgetary Data:

Under GASB 34, budgetary comparison information is required to be presented for the general fund and each major special revenue fund with a legally adopted budget. The District is not legally required to adopt a budget for special revenue funds; therefore, budget comparison information is not included for major special revenue funds.

Annual budgets are adopted for the general fund on a basis consistent with generally accepted accounting principles. In accordance with the by-laws established by the JPA Agreement, the District's governing board must adopt a final budget within the first 90 days of the fiscal year. The District's governing board satisfied this requirement. The Board of Directors is not required to revise the budget for amounts exceeding the original budgetary amounts. There were no budget revisions for the District during the year ended June 30, 2022.

D. Assets, Liabilities, and Equity/Net Position:

Cash:
The District's cash consists of cash on hand and cash in the San Joaquin County Treasury. The County pools these funds with those of other Districts in the county and invests the cash. These pooled funds are carried at cost, which approximates market value and are displayed on the financial statements as cash in county treasury.

NOTE 1 SUMMARY OF SIGNIFICANT ACCOUNTING POLICIES (Continued):

E. Assets, Liabilities, and Equity/Net Position (Continued):

Capital Assets and Depreciation:

In the government-wide financial statements, fixed assets are accounted for as capital assets. Capital assets are reported at historical cost or estimated historical cost, including net interest cost during the construction period of capital assets. Donated assets are reported at their estimated fair value as of the date of donation. Additions, improvements, and other capital outlays that significantly extend the useful life of an asset are capitalized. The costs of normal maintenance and repairs that do not add to the value of the assets or materially extend the assets' lives are not capitalized but are expensed as incurred.

Depreciation on all capital assets is computed using straight-line basis over the following estimated useful lives:

Asset Class	Assets	Estimated Useful Life in Years
Land		N/A
Buildings	Fire Station, Garage, Tower	50
Equipment	Pumpers, Firefighting Equipment	
	Automobiles, Pickups	
	Defibrillator System, Gas Monitors	3-10

Long-Term Obligations:

In the government-wide financial statements, long-term debt and other long-term obligations are reported as liabilities in the statement of net position.

Net Position:

Net position represents the difference between assets and liabilities and are displayed in the three components: 1) Invested in capital assets, net of related debt consists of capital assets, net of accumulated depreciation, reduced by the outstanding balances of any borrowings used for the acquisition, construction or improvements of those assets. 2) Restricted net position constraints placed on the use either by external groups such as creditors, grantors, contributors, or laws or regulations of other governments, or law through constitutional provisions or enabling legislation. 3) Unrestricted net position consists of all other net position that do not meet the definition of "restricted" or "invested in capital assets, net of related debt."

NOTE 1 SUMMARY OF SIGNIFICANT ACCOUNTING POLICIES (Continued):

Use of Estimates:

The preparation of financial statements in conformity with generally accepted accounting principles requires management to make estimates and assumptions that affect the reported amounts of assets and liabilities and disclosure of contingent assets and liabilities at the date of the financial statements and the reported amounts of revenues and expenses during the reporting period. Actual results could differ from those estimates.

NOTE 2 FUND BALANCES:

The governmental fund financial present fund balances based on classification that comprise a hierarchy that is based primarily on the extent to which the District is bound to honor constraints on the specific purposes for which amounts in the respective governmental funds can be spent. The classifications used in the governmental fund financial statements are as follows:

Nonspendable: This classification includes amounts that cannot be spent because they are either (a) not in spendable form or (b) are legally or contractually required to be maintained intact.

Restricted: This classification includes amounts for which constraints have been placed on the use of the resources either (a) externally imposed by creditors (such as through a debt covenant), grantors, contributors, or laws or regulations of other governments, or (b) imposed by law through constitutional provisions or enabling legislation.

Committed: This classification includes amounts that can be used only for specific purposes pursuant to constraints imposed by formal action of the District Governing Board, the highest level of decision-making authority for the District. These amounts cannot be used for any other purpose unless the District Governing Board removes or changes the specific use by taking the type of action (ordinance or resolution) that was employed when the funds were initially committed. This classification also includes contractual obligations to the extent that existing resources have been specifically committed for use in satisfying those contractual requirements.

Assigned: This classification includes amounts that are constrained by the District's intent to be used for a specific purpose but are neither restricted nor committed. This intent can be expressed by the Governing Board or through the Governing Board delegating this responsibility to the Clerk through the budgetary process. This classification also includes the remaining positive fund balance for all governmental funds except for the General Fund.

NOTE 2 FUND BALANCES (Continued):

Unassigned: This classification includes the residual fund balance for the general fund. The unassigned classification also includes negative residual fund balance of any other governmental fund that cannot be eliminated by offsetting of assigned fund balance amounts.

The District would typically use restricted fund balances first, followed by committed resources, assigned, and then unassigned.

NOTE 3 CASH AND INVESTMENTS:

The District maintains its cash in the San Joaquin County Treasury as part of the common investment pool, which total $4,594,909 and $6,630,692 as of June 30, 2022 and 2021, respectively, in accordance with GASB Statement No. 31. The fair market value of the investment pool as of June 30, 2022 and 2021 was $4,594,909 and $6,630,692, respectively. In addition, the District also has outside bank account with Bank of Stockton. The book value of the outside bank account is $2,528,044 on June 30, 2022.

The District is considered to be an involuntary participant in the external investment pool. Interest earned is deposited quarterly into participating funds. Any investment losses are proportionately shared by all funds in the pool. The County is restricted by Government Code Section 53635 et seq. pursuant to Section 53601 et seq. to invest in time deposits, U.S. government securities, state registered warrants, notes or bonds, State Treasurer's investment pool, bankers' acceptances, commercial paper, negotiable certificates of deposit, and repurchase or reverse repurchase agreements. The investment policy for the San Joaquin County Treasury prohibits reverse repurchase securities and foreign investments. Due to constraint and standards imposed by GASB and the top rating agencies, the target weighted average maturity of the portfolio will be approximately one and one-half years. As per the Government Code Section 53601, investments cannot exceed a five-year maturity.

Investments by the District in investment pools are considered unclassified as to credit risk, because they are not evidenced by securities that exist in physical or book entry form. Investment in external investment pools and other pooled investments are excluded from the concentration of credit risk disclosure under GASB Statement No. 40.

Interest rate risk is the risk that changes in market interest rates will adversely affect the fair value of an investment. Generally, the longer the maturity of an investment the greater the sensitivity of its fair value to changes in market interest rate.

Custodial credit risk does not apply to a local government's indirect investment in securities through the use of mutual funds or government investment pools. The County of San Joaquin issues a financial report that includes custodial credit risk disclosures for the Cash in County Treasury. The report may be obtained by writing to the San Joaquin County Treasurer, 44 North San Joaquin Street, Stockton, CA 95202.

NOTE 4 CAPITAL ASSETS:

The following table provides a summary of changes in capital assets.

June 30, 2022	Balance July 1, 2021	Additions	Disposals	Balance June 30, 2022
Capital Assets, Not Depreciated:				
Land - Durham Ferry Rd	$ 177,107	$ -	$ -	$ 177,107
Equipment & Engine - In progress	-	1,162,591	-	1,162,591
Total Capital Assets, Not Depreciated	177,107	1,162,591	-	1,339,698
Capital Assets Depreciated:				
Buildings and Improvements:				
Station - 7th St.	82,128	-	-	82,128
Station - Linne Rd.	97,437	-	97,437	-
Station - Schulte Rd	918,771	-	-	918,771
Station - Durham Ferry Rd.	1,437,707	-	-	1,437,707
Equipment	2,679,598	-	-	2,679,598
Tower	200,000	-	-	200,000
Total Capital Assets Depreciated, Net	5,415,641	-	97,437	5,318,204
Less Accumulated Depreciation for:				
Buildings and Improvements	1,072,316	47,129	89,115	1,030,330
Equipment	1,535,407	175,276	-	1,710,683
Total Accumulated Depreciation	2,607,723	222,405	89,115	2,741,013
Governmental Activities Capital Assets, Net	$ 2,985,025	$ 940,186	$ 8,322	$ 3,916,889

June 30, 2021	Balance July 1, 2020	Additions	Disposals	Balance June 30, 2021
Capital Assets, Not Depreciated:				
Land - Durham Ferry Rd	$ 177,107	$ -	$ -	$ 177,107
Total Capital Assets, Not Depreciated	177,107	-	-	177,107
Capital Assets Depreciated:				
Buildings and Improvements:				
Station - 7th St.	82,128	-	-	82,128
Station - Linne Rd.	97,437	-	-	97,437
Station - Schulte Rd	918,771	-	-	918,771
Station - Durham Ferry Rd.	1,437,707	-	-	1,437,707
Equipment	1,948,800	730,798	-	2,679,598
Tower	200,000	-	-	200,000
Total Capital Assets Depreciated, Net	4,684,843	730,798	-	5,415,641
Less Accumulated Depreciation for:				
Buildings and Improvements	1,024,782	47,534	-	1,072,316
Equipment	1,432,107	103,300	-	1,535,407
Total Accumulated Depreciation	2,456,889	150,834	-	2,607,723
Governmental Activities Capital Assets, Net	$ 2,405,061	$ 579,964	$ -	$ 2,985,025

NOTE 5 LONG-TERM DEBTS:

Changes in Long-Term Debt:

The following summarized long-term debt activity for the years ended June 30, 2022 and 2021:

	Beginning Balance	Additions	Reductions	Ending Balance	Due Within One Year
Capital Euipment - Community FNB - June 30, 2022	$ 608,411	$ 1,095,443	$ 93,979	$ 1,609,875	$ 143,789
Capital Euipment - Community FNB - June 30, 2021	$ -	$ 697,682	$ 89,271	$ 608,411	$ 93,979

Loans Payable:

In February 2020, the District has entered into an equipment lease purchase agreement with Community First National bank. The finance amount is $697,681.75 and average maturity is 7 years with an interest of 3.03 percent per annum. The District yearly required payment amount is $112,437.72.

In February 2022, the District has entered into an equipment lease purchase agreement with Community First National bank. The finance amount is $326,042.55 and average maturity is 7 years with an interest of 2.52 percent per annum. The District yearly required payment amount is $50,408.23.

In February 2022, the District has entered into an GPM Pumper lease purchase agreement with Community First National bank. The finance amount is $769,400.67 and average maturity is 7 years with an interest of 2.52 percent per annum. The District yearly required payment amount is $122,648.07.

Below is a schedule of payments summary:

Fiscal Years	Principal	Interest	Total
2023	$ 143,789	$ 19,357	$ 163,146
2024	$ 237,814	$ 47,980	$ 285,794
2025	$ 253,172	$ 32,622	$ 285,794
thereafter,	$ 975,100	$ 65,847	$ 1,040,947

NOTE 6 PROPERTY TAX REVENUE:

The District's assessed property records are maintained by the San Joaquin County Auditor/Controller's office. The County has entered into an agreement with the special Districts within its borders, commonly known as the Teeter Plan. Under this plan, the District is apportioned and paid the total property taxes to which it is entitled each year. Any delinquent taxes are the responsibility of the County. The County collects and retains all delinquencies, including penalties and interest. Substantially all taxes are paid to the Districts in the year to which they accrue, therefore no receivables accrual or provision for uncollectible are being made. Property taxes are levied on both real and personal property. The property tax levy to support general operations of the District is limited to 1% of full cash value and is distributed in accordance with statutory formulas.

Amounts needed to finance the annual requirements of voter-approved debt are excluded from this limitation and are separately calculated and levied each fiscal year. District special assessments are collected and paid by the County under the Teeter Plan as explained above.

The rates adopted by the approval of the governing board of the District for the current fiscal year were as follows:

Residential dwellings, commericl residential, agricultural, commercial industrial, and the San Joaquin County River Club	$	0.03	Per sq. ft.
Vacant residential lots, vacant commerical lots, and mobile home lots	$	12.00	Per parcel
Waste lands, berms and SBE property	$	10.00	Per parcel
Gas wells, hay barns, and loafing barns	$	25.00	Per parcel
Vacant industrial lots	$	250.00	Per parcel
Poultry containment buildings	$	0.01	Per parcel
Tire storage facilities and/or wood chip storage	$	1,500.00	Per parcel

NOTE 7 JPA AGREEMENT SUMMARY:

Under the terms of the new JPA Agreement, the South County Fire Authority ("Authority") is empowered to manage the fire prevention services for the City and District, also known as the Fire Department. The Authority is presently contracting for such services with the City of Tracy. Under the contract, the City is to administer the Fire Department under the direction of the JPA's Fire Chief and provide the necessary administrative support for its programs and operations. This includes providing personnel, fiscal, procurement, maintenance, and clerical support for all department activities on behalf of the Authority. The JPA Agreement contemplates that the JPA will eventually assume responsibility for all administration and employment of personnel.

Among other items, the Authority leases real and personal property belonging to the City and District. The Authority is responsible for operation and maintenance of this property, while the City and District are responsible for replacing or purchasing new property. The

NOTE 7 JPA AGREEMENT SUMMARY (Continued):

City and District are also responsible for providing whatever insurance they deem appropriate for the property owned by each or jointly.

The dissolution agreement of the old JPA also provided for other terms, including:

a) All existing contracts for goods, services and for equipment entered into by the old JPA are assigned to the new JPA.

b) Balances owed by District to the City of Tracy are reduced as of June 30, 2018.

c) City is entitled to full ownership of Station 92.

d) If the District ceases to operate any Fire Station currently located in an overlapping jurisdiction area, the station will revert to the City.

e) City will collect and dispense to District certain impact fees.

NOTE 8 INTERFUND TRANSACTIONS:

Interfund transactions are reported as loans, services provided reimbursements, or transfers. Loans are reported as Interfund receivables and payables, as appropriate, and are subject to elimination upon consolidation. Services provided, deemed to be at market or near market rates, are treated as revenues and expenditures/expenses. Reimbursements occur when one fund incurs a cost, charges the appropriate benefiting fund, and reduces its related cost as a reimbursement. All other Interfund transactions are treated as transfers.

Transfers among governmental funds are netted as part of the reconciliation to the government-wide financial statements.

Interfund Transfers:

Interfund transfers for the 2021/2022 fiscal year were as follows:

Tranfers In	Amount	Transfers Out	Amount
General Fund	$ 634,570	General Fund	$ -
Capital Reserve Fund	-	Capital Reserve Fund	(434,570)
Special Revenue Fund	-	Special Revenue Fund	(200,000)
	$ 634,570		$ (634,570)

NOTE 8 INTERFUND TRANSACTIONS (Continued):

Interfund transfers for the 2020/2021 fiscal year were as follows:

Tranfers In	Amount	Transfers Out	Amount
General Fund	$ 309,825	General Fund	$ -
Capital Reserve Fund	-	Capital Reserve Fund	(509,825)
Special Revenue Fund	200,000	Special Revenue Fund	-
	$ 509,825		$ (509,825)

The above transfers were to establish the Special Revenue and Contingency Funds.

NOTE 9 CONTINGENCIES:

The District is exposed to various risks of loss related to torts; theft, damage, and destruction of assets; errors and omissions; and natural disasters. The District purchases commercial insurance for general liability and management liability with coverage up to a maximum of $3,000,000, subject to various policy limited generally ranging from $5,000 to $1,000,000 per occurrence.

NOTE 10: DEFINED BENEFITS PENSION PLANS:

The District is still responsible for retirement benefit cost for retirement benefits earned by the District's employees who became employees of the State of California during their employment period with the District; however, the State of California is responsible for the retirement benefit cost for any subsequent retirement benefits earned by those employees. As of June 30, 2022, the District did not have any active employees.

Plan Description, Benefits Provided and Employees Covered

The plan is a cost-sharing multiple-employer defined benefit pension plan administered by the California Public Employees; Retirement System (CalPERS). A full description of the pension plan benefit provisions, assumptions for funding purposes but not accounting purposes, and membership information is listed in the June 30, 2020 Annual Actuarial Valuation Report. Details of the benefits provided can be obtained in Appendix B of the June 30, 2020 actuarial valuation report. This report is a publically available valuation report that can be obtained at CalPERS' website under Forms and Publications.

NOTE 10: DEFINED BENEFITS PENSION PLANS (Continued):

Contribution Description

Section 20814(c) of the California Public Employees' Retirement Law (PERL) requires that the employer contribution rates for all public employers are determined on an annual basis by the actuary and shall be effective on the July 1 following notice of a change in the rate. The total plan contributions are determined through the CalPERS' annual actuarial valuation process.

For public agency cost-sharing plans covered by either the Miscellaneous or Safety risk pools, the Plan's actuarially determined rate is based on the estimated amount necessary to pay the Plan's allocated share of the risk pool's costs of benefits earned by employees during the year, and any unfunded accrued liability.

Actuarial Methods and Assumptions Used to Determine Total Pension Liability

The collective total pension liability for the June 30, 2021 measurement period was determined by an actuarial valuation as of June 30, 2020, with update procedures used to roll forward the total pension liability to June 30, 2021. The collective total pension liability was based on the following assumptions:

Actuarial Cost Method	Entry Age Normal in accordance with the requirements of GASB Statement No. 68
Acturial Assumptions	
Discount Rate	7.15%
Inflation	2.50%
Salary Increases	Varies by Entry Age and Service
Mortality Rate Table	Derived using CalPERS' Membership Data for all Funds
Post Retirement Benefit	Contract COLA up to 2.50% until Purchasing Power Protection Allowance Floor on Purchasing Power applies

Discount Rate

The discount rate used to measure the total pension liability for PERF C was 7.15%. The projection of cash flows used to determine the discount rate assumed that contributions from plan members will be made at the current member contributions rates and that contributions from employers will be made at statutorily required rates, actually determined. Based on those assumptions, the plan's fiduciary net position was projected to be available to make all projected future benefit plan's fiduciary net position was projected to be available to make all projected future benefit payment of current plan members. Therefore, the long-term expected rate of return on plan investments was applied to all periods of projected benefits payments to determine the total pension liability.

NOTE 10: DEFINED BENEFITS PENSION PLANS (Continued):

The table below reflects long-term expected real rate of return by asset class. The rate of return was calculated using the capital market assumptions applied to determine the discount rate and asset allocation. These geometric rates of return are net of administrative expenses.

Asset Class	Current Target Allocation	Real Return Years 1 - 10	Real Return Years 11 +
Global Equity	50.0%	4.80%	5.98%
Global Fixed Income	28.0	1	2.62
Inflation Sensitive	0.0	0.77	1.81
Private Equity	8.0	6.3	7.23
Real Estate	13.0	3.75	4.93
Liquidity	1.0	-	(0.92)

The following table shows the Plan's proportionate share of the risk pool collective net pension liability over the measurement period.

	Plan Total Pension Liability (a)	Plan Fiduciary Net Position (b)	Plan Net Pension Liability/(Asset) (c) = (a) - (b)
Balance at : 6/30/2021 (MD)	$ 15,388,505	$ 10,401,022	$ 4,987,483
Balance at : 6/30/2022 (MD)	$ 15,552,320	$ 10,411,605	$ 5,140,715
Net Changes during 2020-21	$ (163,815)	$ (10,583)	$ (153,232)

Sensitivity of the Net Pension Liability to Changes in the Discount Rate

The following presents the net pension liability/(assets) of the Plan as of the measurement date, calculated using the discount rate of 7.15 percent, as well as what the net pension liability/(asset) would be if it were calculated using a discount rate that is 1 percentage-point lower (6.15 percent) or 1 percentage-point higher (8.15 percent) than the current rate:

	Discount Rate - 1% (6.15%)	Current Discount Rate (7.15%)	Discount Rate + 1% (8.15%)
Plan's Net Pension Liability/(Asset) - 2022	$ 7,234,065	$ 5,140,715	$ 3,421,252
Plan's Net Pension Liability/(Asset) - 2021	$ 7,077,174	$ 4,987,483	$ 3,272,659

NOTE 10: DEFINED BENEFITS PENSION PLANS (Continued):

PENSION EXPENSE AND DEFERRED OUTFLOWS AND DEFERRED INFLOWS

For the fiscal years ended June 30, 2022 and 2021, Pension Expense recognized is as follows:

	2022	2021
Service Cost	$ 732,569	$ 359,443
Interest Cost	2,599,706	1,255,830
Changes of Benefits Terms	601	-
Recognized Difference Between Projected and Actual Earnings on Plan Investment	(1,916,052)	98,887
Employee Contributions		
Net Plan to Plan Resource Movement	(440,625)	(111,066)
Administrative Expense	27,277	18,113
Projected and Actual Earnings on Plan Investment	(937,750)	(90,234)
Other Miscellaneous Expenses	-	-
Difference between Expected & Actual Experience	532,632	199,751
Recognized Changes of Assumptions	(32,494)	170,782
Pension Expense	$ 565,864	$ 1,901,506

As of June 30, 2022, and 2021, the Tracy Rural Fire Protection District reports other amounts for the Plan as deferred outflows and deferred inflows of resources related to pensions as follows:

	Deferred Outflows of Resources 2022	Deferred Inflows of Resources 2022	Deferred Outflows/ (Inflows) of Resources 2021
Changes of Assumptions	$ -	$ -	$ (16,616)
Difference Between Expected and Actual Experience	878,163	-	386,733
Difference Between Projected and Actual Earnings on Investments	-	3,060,298	108,405
Changes in Employer's Proportion	-	101,518	(129,089)
Differences Between Employer's Contribution and Proportionate Share of Contributions	725,971	122,673	(129,868)
Contributions Made Subsequent to the Measurement Date	519,598	-	504,785
Total	$ 2,123,732	$ 3,284,489	$ 724,350

NOTE 10: DEFINED BENEFITS PENSION PLANS (Continued):

Amounts reported as deferred outflows and deferred outflows and inflows of resources related to pensions, will be recognized in future pension expense as follows:

Measurement Period Ended June 30,	Deferred Outflows/(Inflows) of Resources - 2022	Deferred Outflows/(Inflows) of Resources - 2021
2022	-	-
2023	(35,294)	111,463
2024	(152,831)	210,358
2025	(338,317)	146,298
2026	(738,233)	155,274
2027	103,918	100,957
Thereafter	-	-

NOTE 11 POST EMPLOYMENT BENEFITS OTHER THAN PENSION BENEFITS:

In addition to the pension benefits described in note 10, the District's pay –as-you-go policy with PERS provides post-retirement health care benefits to all employees who retire from the District on or after attaining age 55 with at least 20 years of service. The District pays medical premiums for this eligible retiree.

NOTE 12 BOARD OF DIRECTORS:

Name	Title	Term Expires
Pete Reese	Chairman	December 2022
Jeff Ramsey	Vice Chair	December 2024
John Vierra	Director	December 2022
Matt Kopinski	Director	December 2024
Craig Miller	Director	December 2024

NOTE 13 RELATED PARTY TRANSACTIONS:

Under the JPA Agreement the District share of costs for services totaled $9,527,364 and $5,833,333 for the fiscal years ended June 30, 2022 and 2021, respectively.

Below is the summary of business consulting expenses for years ended June 30, 2022 and 2021:

Business Name:	June 30, 2022	June 30, 2021
Special District Financial Service	$ 54,400	$ 38,166
Natalie C. Brown	-	6,249
Raychel S. Jackson	-	4,166
Total	$ 54,400	$ 48,581

NOTE 14 SUBSEQUENT EVENTS:

The District has evaluated subsequent to June 30, 2022, to assess the need for potential recognition or disclosures in the financial statements. Such events were evaluated through November 30, 2022, the date these financial statements were available to be issued. Based upon this evaluation, it was determined that, no subsequent events occurred that require recognition or additional disclosures in the financial statements.

TRACY RURAL COUNTY FIRE PROTECTION DISTRICT
Budgetary Comparison Schedule - General Fund
For the Year Ended June 30, 2022

	Original & Final Budgeted Amounts	Actual Amounts	Variance with Final Budget Positive (Negative)
REVENUES			
Property Taxes	$ 7,714,851	$ 8,112,842	$ 397,991
Property Assessments	1,581,850	1,580,268	(1,582)
State Property Taxes	53,633	52,671	(962)
Programs Revenues	192,223	560,270	368,047
Rent Income	36,400	4,480	(31,920)
Miscellaneous Income	-	27,585	27,585
Interest	15,902	5,753	(10,149)
Total Revenues	9,594,859	10,343,869	749,010
EXPENDITURES			
Fire Services	8,820,000	9,527,364	(707,364)
Attorney	295,000	122,429	172,571
Auditor	7,000	6,725	275
County Tax Administration Charges	120,000	133,019	(13,019)
County Direct Assessment and AP Charges	15,000	15,756	(756)
Business Services	52,500	54,400	(1,900)
Miscellaneous	476,800	95,907	380,893
Director's Fees	20,000	17,300	2,700
Insurance - General Liability	40,000	32,667	7,333
Retirement (PERS)	586,839	522,252	64,587
Total Expenditures	10,433,139	10,527,819	(94,680)
Excess (Deficiency) of Revenues over (under) Expenditures	(838,280)	(183,950)	654,330
OTHER FINANCIAL SOURCES (USES)			
Operating transfers in		634,570	
Fund Balance - July 1, 2021		4,318,724	
Fund Balance - June 30, 2022		$ 4,769,344	

TRACY RURAL COUNTY FIRE PROTECTION DISTRICT
Budgetary Comparison Schedule - General Fund
For the Year Ended June 30, 2021

	Original & Final Budgeted Amounts	Actual Amounts	Variance with Final Budget Positive (Negative)
REVENUES			
Property Taxes	$ 6,703,132	$ 7,390,656	$ 687,524
Property Assessments	1,445,817	1,486,473	40,656
State Property Taxes	42,000	50,597	8,597
Programs Revenues	4,000	-	(4,000)
Fee for Service	-	-	-
Miscellaneous Income	-	80,498	80,498
Interest	20,000	9,556	(10,444)
Total Revenues	8,214,949	9,017,780	802,831
EXPENDITURES			
Fire Services	6,168,618	5,881,816	286,802
Special Services	8,000	7,981	19
Attorney	288,000	203,802	84,198
Auditor	7,800	6,725	1,075
County Tax Administration Charges	120,600	110,187	10,413
County Direct Assessment and AP Charges	15,000	14,882	118
Business Services	50,000	48,581	1,419
Miscellaneous	74,000	33,682	40,318
Director's Fees	30,000	16,945	13,055
Insurance - General Liability	25,000	22,326	2,674
Retirement (PERS)	1,289,055	507,293	781,762
Election	5,000	-	5,000
Capital Outlay (Transfer)	300,000	33,116	266,884
Debt Service (Transfer)	112,438	-	112,438
Total Expenditures	8,493,511	6,887,336	1,606,175
Excess (Deficiency) of Revenues over (under) Expenditures	(278,562)	2,130,444	2,409,006
Operating transfers in		309,825	
Fund Balance - July 1, 2020		1,878,455	
Fund Balance - June 30, 2021		$ 4,318,724	

TRACY RURAL FIRE PROTECTION DISTRICT
Schedules of Required Supplementary Information - Pension Plan
June 30,

Schedule of the Plan's Proportionate Share of the Net Pension Liability and Related Ratios as of the Measurement Date in Relation to PERF C

	2022	2021	2020	2019	2018	2017	2016
Plan's Proportion of the Net Pension Liability/(Asset)	0.02837%	0.02197%	0.02888%	0.02773%	0.02958%	0.02658%	0.02212%
Plan's Proportionate Share of the Net Pension Liability/(Asset)	$ 5,140,715	$ 4,987,483	$ 4,489,159	$ 4,489,159	$ 4,486,478	$ 3,662,717	$ 3,099,059
Plan's Covered-Employee Payroll						$ -	$ -
Plan's Proportionate Share of the Net Pension Liability/(Asset) as a Percentage of its Covered-Employee Payroll	0.00%	0.00%	0.00%	0.00%	0.00%	0.00%	0.00%
Plan's Proportionate Share of the Fiduciary Net Position as a Percentage of the Plan's Total Pension Liability	0.00%	0.00%	0.00%	0.00%	0.00%	0.00%	0.00%
Plan's Proportionate Share of Aggregate Employer Contributions	$ -	$ -	$ -	$ -	$ -	$ -	$ -

Schedule of Plan Contributions

	2022	2021	2020	2019	2018	2017	2016
Actuarially Determined Contribution	$ 519,781	$ 522,154	$ 472,117	$ 428,584	$ 302,887	$ 218,980	$ 204,694
Contributions in Relation to the Actuarially Determined Contribution	(519,781)	(522,154)	(472,117)	(428,584)	(302,887)	(218,980)	(204,694)
Contribution Deficiency (Excess)	$ -	$ -	$ -	$ -	$ -	$ -	$ -
Covered-Employee Payroll	$ -	$ -	$ -	$ -	$ -	$ -	$ -
Contributions as a Percentage of Covered-Employee Payroll	0.00%	0.00%	0.00%	0.00%	0.00%	0.00%	0.00%

Notes to Schedule

Change in Benefit Terms: The figures above do not include any liability impact that may have resulted from plan changes which occurred after June 30, 2020 as they have minimal cost impact.

Change in Assumptions: None

TRACY RURAL COUNTY FIRE PROTECTION DISTRICT
Combining Balance Sheet
NonMajor Special Revenue Funds
June 30,

	2022		
ASSETS	**Special Reserve Fund**	**Fire Facility Fund**	**Total**
Cash in Treasury	$ 18,894	$ 453,324	$ 472,218
Interest Receivable	-	605	605
Total Assets	18,894	453,929	472,823
LIABILITIES AND FUND BALANCES			
Liabilities	-	-	-
Total Liabilities	-	-	-
FUND BALANCES			
Assigned	18,894	453,929	472,823
Total Liabilities and Fund Balances	$ 18,894	$ 453,929	$ 472,823

	2021		
ASSETS	**Special Reserve Fund**	**Fire Facility Fund**	**Total**
Cash in Treasury	$ 218,894	$ 433,500	$ 652,394
Interest Receivable	-	390	390
Total Assets	218,894	433,890	652,784
LIABILITIES AND FUND BALANCES			
Liabilities	-	-	-
Total Liabilities	-	-	-
FUND BALANCES			
Assigned	218,894	433,890	652,784
Total Liabilities and Fund Balances	$ 218,894	$ 433,890	$ 652,784

TRACY RURAL COUNTY FIRE PROTECTION DISTRICT
Combining Statement of Revenues, Expenditures, and Changes in Fund Balances
Non-Major Special Revenue Funds
For the Years Ended June 30,

	2022		
REVENUES	**Special Reserve Fund**	**Fire Facility Fund**	**Total**
Program Revenues	$ -	$ 18,378	$ 18,378
Interest	-	1,661	1,661
Total Revenues	-	20,039	20,039
EXPENDITURES			
Employee Benefits	-	-	-
Excess (Deficiency) of Revenues over (under) Expenditures	-	20,039	20,039
OTHER FINANCING SOURCES (USES)			
Operating Transfers In (Out)	(200,000)	-	(200,000)
Total Other Financing Sources (Uses)	(200,000)	-	(200,000)
Excess (Deficiency) of Revenues and Other Financing Sources Over (Under) Expenditures and Other Uses	(200,000)	20,039	(179,961)
Fund Balances, July 1, 2021	218,894	433,890	652,784
Fund Balances, June 30, 2022	$ 18,894	$ 453,929	$ 472,823

	2021		
REVENUES	**Special Reserve Fund**	**Fire Facility Fund**	**Total**
Program Revenues	$ -	$ 4,396	$ 4,396
Interest	-	2,216	2,216
Total Revenues	-	6,612	6,612
EXPENDITURES			
Employee Benefits	127,332	-	127,332
Excess (Deficiency) of Revenues over (under) Expenditures	(127,332)	6,612	(120,720)
OTHER FINANCING SOURCES (USES)			
Operating Transfers In	200,000	-	200,000
Operating Transfers Out	-	-	-
Total Other Financing Sources (Uses)	200,000	-	200,000
Excess (Deficiency) of Revenues and Other Financing Sources Over (Under) Expenditures and Other Uses	72,668	6,612	79,280
Fund Balances, July 1, 2020	146,226	427,278	573,504
Fund Balances, June 30, 2021	$ 218,894	$ 433,890	$ 652,784

Tracy Rural County
Fire Protection District

Agenda Item 4.2

STAFF REPORT

Meeting: **Regular Meeting**
Date: **February 14, 2023**
To: **Board of Directors**
Prepared by: **Raychel Jackson, District Clerk**
Approved by: **Pete Reece, Chairperson**

Re: **Adopt Resolution Establishing a Records Retention Policy**

RECOMMENDATION

Action Item __X___ Non-Action Item_____

Staff recommends the Board of Directors adopt a resolution establishing a Records Retention Policy.

BACKGROUND

Due to the continual steady growth in the volume of records the District handles within its limited space, staff is requesting the Board consider adopting this policy. A retention schedule is necessary to reduce current and future records storage, costs, eliminate duplicates, increase efficiency, implement current technology and comply with changes in the law.

These records include but are not limited to: records related to collection actions, contracts, general administration, claims and litigation, safety, and insurance matters. Some of the records are required to be kept permanently, while others are required to be kept for certain time periods. A records retention policy is appropriate to reduce the cost of maintaining and storing records, as well as the time and resources spent in searching through large amounts of records that are no longer needed. The records retained by the District currently exceed available storage and a number of records have been identified as obsolete. A records retention policy will allow staff to purge outdated records. The retention policy included as Exhibit A to the resolution (Attachment 1) includes the types of records retained by staff and the assigned retention period for those records. Staff has carefully considered the assigned retention periods and found the assigned periods to appropriately meet operational needs, are consistent with the retention policies maintained by other local agencies and are compliant with statutory requirements applicable to records retention.

In addition to maintaining records in accordance with an approved records retention policy, in order to further improve efficiencies and reduce the need for, and costs associated with, physical storage space, staff will look for opportunities to store records electronically, in a trusted system, pursuant to Government Code section 34090.5.

DISCUSSION

The records retention schedule must be updated regularly to keep up with technology, current best practices and changing legislation. Adopting this schedule will provide greater efficiency and is important to assist staff in implementing the timely disposal of records which have met their retention and no longer needed for current operations and to preserve records with any historical value.

FISCAL IMPACTS

None.

ATTACHMENTS

1. Records Retention Policy
2. Records Retention Schedule
3. Resolution 2023-02

Records Management Policy Manual and Retention Schedule

Purpose & Scope:

The purpose of this policy is to provide guidelines to staff regarding the retention or disposal of Tracy Rural County Fire Protection District ("District") records; provide for the identification, maintenance, safeguarding and disposal of records in the normal course of business; ensure prompt and accurate retrieval of records; and, ensure compliance with legal and regulatory requirements.

Vital and important records, regardless of recording media, are those having legal, financial, operational, or historical value to the District.

Under the provisions of Government Code §§ 60200 through 60204, and the guidelines prepared by the State Controller's office and the Controller's Advisory Committee for Special Districts, the following qualifications will govern the retention and disposal of records of the District. This policy will illustrate the District's authority in records management, delineate a records retention schedule and discuss storage, archiving and destruction.

Authorization

District Staff is authorized by the Board of Directors implement this policy, and to cause to be destroyed any or all such records, papers and documents that meet the qualifications governing the retention and disposal of records, according to the Records Retention Schedule, attached hereto as Exhibit A.

Pursuant to Government Code § 60203, the District has the authorization to destroy or dispose of any record, paper, or document which is not expressly required by law to be filed and preserved if the record, paper or document is photographed, micro-photographed, reproduced by electronically recorded video images on magnetic surfaces, recorded in the electronic data processing system, recorded on optical disk, reproduced on film or any other medium that is a trusted system and that does not permit additions, deletions, or changes to the original document in compliance with Government Code §12168.7 for recording of permanent records or nonpermanent records.

Records Retention Schedule

Establishment of a records retention policy and schedule allows the District to manage, maintain, retain, destroy or duplicate records in compliance with the applicable provisions of the California Government Code. The Records Retention Schedule for the District is found in Exhibit A of this document and defines Record Types, provides a description or examples of what meets the criteria for that record type and details the legal authority and minimum retention period prescribed by said legal authority. The schedule also includes the legal authority abbreviations utilized throughout the matrix.

District staff shall review annually the records retention schedule and storage inventory list to determine which records are eligible for destruction.

Storage

For records existing in paper form, retention periods apply to the original paper copy only. Drafts (i.e., initial or preliminary versions) may be disposed of at any time. Duplicate copies and electronic copies may be disposed of at any time at the discretion of the District's management, unless the original has been lost. Electronic records will be retained as if they were paper documents. Therefore, any electronic files, including emails that fall into one of the document types in this Policy will be maintained for the appropriate amount of time. District staff will maintain a storage inventory list of documents that are stored and records destroyed.

Permanent records should be kept in the original format, whenever feasibly possible. However, both storage limitations and the condition and age of original documents have impacts on the manner in which permanent records can be stored. Permanent records will also be archived as back-up in the manner prescribed in the following "Archive" section of this document. The archiving will not only allow for easier retrieval of records, but will also serve as an added safety measure for aging documents in the event they deteriorate with time. Non-permanent records will be retained in compliance with the retention schedule for the minimum legal retention period and pursuant to the legal authority specified in Exhibit A. As with permanent records, non-permanent records may be archived for back up as prescribed. Further, these documents will be disposed of in compliance with the methods recommended in the destruction section of this document.

Archiving

Certain documents require long term or permanent hard copy retention and others may be archived for purposes of storage and space saving. To ensure efficiency and economy in utilization of office space for active records, all files not updated or referenced on a regular basis can be transferred to storage. Documents that are not required to be preserved as permanent or in its original format, may be duplicated and stored in an electronic format. The manner in which the District will store and maintain its duplicated electronic documents, will be in the form of a Portable Document File (pdf) and stored on the District's One Drive account.

Destruction

Once records have fulfilled their administrative, fiscal, or legal function, they should be disposed of as soon as possible in accordance with the Records Retention Schedule. This destruction should include originals, photocopies, and documents stored in any electronic format, unless the document is designated as a permanent record. Records may be destroyed by shredding, recycling or via general disposal. Confidential records will be destroyed by shredding or other secure manner that preserves their confidentiality. District staff shall ensure destruction is coordinated and documented in accordance with this policy. Prior to permanent destruction, a list of records to be destroyed shall be presented to the District Board of Directors for review. If there are no objections to the records due for destruction, the Board shall authorize staff, via adoption of a Resolution, to proceed with destruction.

No District official or staff, by virtue of his or her position, have any personal rights to the District records even though he or she may have created or compiled them. The unauthorized destruction, removal, or use of such records is prohibited.

Exceptions

Legal Requirements. To the extent that any Applicable Laws exceed the retention periods in this Policy, the Applicable Laws will control.

Legal Hold. All Records required to be retained due to pending or threatened litigation or investigation shall be retained for so long as the legal hold is active.

Contractual Requirements. To the extent that contractual records retention requirements exceed the retention periods in this Policy, or specify the retention of Records not listed in the Policy, the contractual requirements will control. No originals of Records related to open contracts and subject to contractual retention requirements may be destroyed without the approval of the Board or Directors and/or consultation of legal counsel, if necessary.

Records Retention Schedule
Tracy Rural County Fire Protection District

Type of Record	Description of Record	Legal Authority	Retention
Accidents / Damage to District Property	Risk management	CCP 337.15; GC 60201	Close/Completion +10 years
Agreements and Contracts	Original contracts, agreements, and back-up materials; capital projects – grants, MOUs, reimbursement; contractors / consultants to perform work or services or to provide goods.	CCP 317, 318, 319, 337	Permanent
Accounts Payable	Journals, statements, asset inventories, account postings with supporting documents, vouchers Invoices, checks, reports, investments, purchase orders	CCP 337; 26 CFR 31.6001- 1(e)(2)	After audited + 7 yrs.
Accounts Receivable	Invoices, checks, reports, investments, receipt books	26 CFR 31.6001-1(e)(2)	After audited + 4 yrs.
Agenda/Agenda Packets	Complete Agendas and packets should be imaged immediately. A paper copy will be maintained for one year only. The imaged or scanned (pdf) records may serve as the permanent record.	GC 60201	Permanent
Annexations / Reorganizations	Notices, Resolutions, Certificates of Completion	GC 60201	Permanent
Annual Financial Reports/Audit Reports	Independent auditor analysis Financial services; internal and/or external reports; independent auditor analysis	GC 60201	Permanent
Appraisals	For real property owned by District – Not a public record until real estate transaction is complete	GC 60201; GC 6254(h)	5 yrs.
Bank Account Reconciliations	Bank statements, canceled checks, certificates of deposit	GC 60201; 26 CFR 31.6001-1(e)(2)	After audited + 5 yrs.
Bids, Accepted	Includes plan and specifications; notices/affidavits.	GC 60201; CCP 337, 337.1	After Audit +4 yrs.
Bids, Unaccepted	Unaccepted bid packages only	GC 60201(d)(11)	2 yrs.

Legal Authority Abbreviations

CCP	Code of Civil Procedure (California)	GC	Government Code (California)	VC	Vehicle Code (California)
CCR	California Code of Regulations	H&S	Health & Safety Code		
CFR	Code of Federal Regulations	IRS	Internal Revenue Service		
EC	Elections Code (California)	USC	United States Code		

Records Retention Schedule
Tracy Rural County Fire Protection District

Type of Record	Description of Record	Legal Authority	Retention
Bonds including development	Final bond documentation	CCP 337.5	10 yrs.
Bonds & Insurance	Insuring District property	CCP 337.2 & 343	Permanent
Budget	Adopted budgets, capital improvement program	GC 60201	Permanent
Capital Improvement Project	Supporting documents including bidders list, specifications, reports, plans, work orders, schedules	CCP 337.15; GC 60201	Close/Completion +10 yrs
Capital Improvement Project Construction Documents	Records regarding planning design, construction, conversion, or modification of owned facilities, structure and systems	GC 34090a & 4004; H&S 19850	Permanent
Checks	Includes payroll, canceled & voided checks (electronic image copies)	GC 34090; GC 60201(d)(12)	After audited + 7 yrs.
Claims/Damages	Paid/denied	GC 34090; GC 25105.5	5 yrs.
Correspondence & Memos	External and Internal	GC 60201	2 yrs.
Deeds, Real Property	Recorded documents, including easements and right of ways	GC 34090; GC 60201(d)(8)	Permanent
District Formation documents	Secretary of State filings	GC 34090; CCP 337.2	Permanent
Economic Interest Statements – Form 700	Copies of original statements of elected officials and/or designated employees	GC 81009(e)(f) & (g)*	Calendar Year End + 4 yrs. (can image after 2yrs)
Elections	Certificates of election; original reports and statements	GC 81009(a)(d); EC 17200	Permanent
Ethics training certificates	Board Directors required to complete ethics training every 2 years	GC53232	5 yrs. after received training
Grant financial records	Successful applications & supportive financial records; refer to grant close-out procedures	GC 34090; GC 60201; 24 CFR 570.502; 24 CFR 85.42; FEMA Guidelines	10 yrs. (but refer to grant for any close out procedures)
Historical Records	Records with significant historical value	GC 60201	Permanent
Insurance certificates / Liability & Property	Filed separately for contracts & insurance filed by licensees/ for District operations and projects	GC 34090	Permanent
Inventory – Capital Assets	Includes purchase date, cost & account number (including electronic data base)	GC 34090	5 yrs.

Legal Authority Abbreviations

CCP	Code of Civil Procedure (California)	GC	Government Code (California)	VC	Vehicle Code (California)
CCR	California Code of Regulations	H&S	Health & Safety Code		
CFR	Code of Federal Regulations	IRS	Internal Revenue Service		
EC	Elections Code (California)	USC	United States Code		

Records Retention Schedule
Tracy Rural County Fire Protection District

Type of Record	Description of Record	Legal Authority	Retention
Inventory- Vehicle ownership & title	Owners manual, warranty documents, DMV title and registration, and related documents	GC 34090; VC 9900 et seq.	Until Sold
Litigation	Case files	GC 60201	Until settled or adjudicated + 5 yrs.
Minutes	Minutes of District Board meetings. Documents are to be imaged immediately. Paper records are to be maintained permanently by the Board.	GC 34090; GC 36814; GC 40801	Permanent
Oath of Office	Elected and public officials – Board Members	GC 60201 29 USC 1113	Current + 6 yrs.
Ordinances	Legislative actions	GC 34090 & 40806	Permanent
Publications	Legal notices for public hearing, publication of ordinances, etc.	None	5 yrs.
Purchasing RFQ's, RFP's	Requests for Qualifications; Requests for Proposals regarding goods and services	CCP 337; GC 60201	After Audit +5 yrs.
Procedures & Policies	All District policies & procedures other than standard operating procedures and general orders	GC 34090 & 40801	5 yrs.
Public Records Request		GC 34090	5 yrs.
Records Management Disposition Certification	Documentation of final disposition of records	GC 60201(d)(5)	Permanent
Resolutions	Legislative actions	GC34090(d) & 40801*	Permanent
Special District Financial Transaction Report	Finance	GC 60201	Permanent
State Controller Reports	Annual reports	GC 60201	After Audit +4 yrs.
Surplus Property – auction disposal	Listing of property, sealed bid sales of equipment; disposal	GC 60201; CCP 337	After Audit +4 yrs.
Tapes/Videos Board/Committee Meetings	Audio Tapes, CD or DVD recordings of Board meetings made for preparation of Board meeting minutes	GC54953.5(b)	30 days
Tax Reports Federal & State	Includes form 1096, W-4's and W-2's	GC34090; 29USC436; 26CFR31.6001.1-4; IRS Reg 31.6001-1(e)(2);	After Audits +4 yrs.

Legal Authority Abbreviations

CCP	Code of Civil Procedure (California)	GC	Government Code (California)	VC	Vehicle Code (California)
CCR	California Code of Regulations	H&S	Health & Safety Code		
CFR	Code of Federal Regulations	IRS	Internal Revenue Service		
EC	Elections Code (California)	USC	United States Code		

Records Retention Schedule
Tracy Rural County Fire Protection District

Type of Record	Description of Record	Legal Authority	Retention
		R&T19530; 29CFR516.5 & 516.6*	

Legal Authority Abbreviations

CCP	Code of Civil Procedure (California)	GC	Government Code (California)	VC	Vehicle Code (California)
CCR	California Code of Regulations	H&S	Health & Safety Code		
CFR	Code of Federal Regulations	IRS	Internal Revenue Service		
EC	Elections Code (California)	USC	United States Code		

Tracy Rural County Fire Protection District

Resolution No. 2023-02

A RESOLUTION OF THE TRACY RURAL FIRE PROTECTION DISTRICT BOARD OF DIRECTORS AUTHORIZING THE DESTRUCTION OF CERTAIN FIRE DISTRICT RECORDS

WHEREAS, in compliance with Resolution 2023-02, the Board authorizes for the destruction of certain records pursuant to the records retention schedule; and

WHEREAS, District staff has requested permission to destroy certain records, the exact nature and extent of which are set forth in Exhibit A, and by this reference made a part thereof; and

WHEREAS, said request is in accordance with the procedures and requirements of Sections 60200 through 60203 of the California Government Code; and

WHEREAS, the request list of records to be destroyed shown in Exhibit A has been reviewed and approved by District Counsel.

NOW THEREFORE, BE IT RESOLVED, by the Board of Directors of Tracy Rural County Fire Protection District that:

In accordance with California Government Code Section 60203, to destroy the records described on the document marked Exhibit A, attached hereto and made a part thereof.

Motion passed.
Passed, approved, and adopted this 14th day of February, 2023.

_____
Pete Reece, Chairman of the Board

ATTEST:

_____
Raychel Jackson, Clerk of the Board

Tracy Rural County
Fire Protection District

Agenda Item 4.3

STAFF REPORT

Meeting: **Regular Meeting**
Date: **February 14, 2023**
To: **Board of Directors**
Prepared by: **Raychel Jackson, District Clerk**
Approved by: **Pete Reece, Chairperson**

Re: **Update Information Regarding Station Maintenance Issues**

RECOMMENDATION

Action Item ___X__ Non-Action Item_____

Receive an update on Station 93, Station 94 and Station 95 maintenance issues and modifications and provide direction to staff concerning future projects.

BACKGROUND

Station 93, located at 1400 W Durham Ferry Road, was constructed and occupied in 2006. Station 94, located at 16502 West Schulte Road, was remodeled from an existing 20+ year old ranch house into a fire station in 1995. Over the years, both stations have experienced maintenance issues that can be attributed to their age and the normal wear and tear related to fire station operations.

DISCUSSION

Ongoing maintenance and repairs at all stations. Update on solar at Station 93; update on Cost for maintaining property; update on the punch list for Station 95;

FISCAL IMPACTS

None.

ATTACHMENTS

None.

Tracy Rural County
Fire Protection District

Agenda Item 4.4

STAFF REPORT

Meeting: **Regular Meeting**
Date: **February 14, 2023**
To: **Board of Directors**
Prepared by: **Raychel Jackson, District Clerk**
Approved by: **Pete Reece, Chairperson**

Re: **Receive Updated Information on the Solar Project at Station 93**

RECOMMENDATION

Action Item __X___ Non-Action Item_____

Receive an update on solar project at Station 93 and provide staff with further instructions.

BACKGROUND

The Board of Directors have requested staff to request quotes and receive information for the costs of installing solar panels and equipment at Station 93.

DISCUSSION

Over the last two years, the District began investigating opportunities to implement the use of solar panels to generate energy needed to operate Station 93. The proposed project will produce an alternative source of energy for Station 93. The goal is to install solar panels so the District will have a secure energy source alternative that will be below the cost the District would spend for that same amount of energy purchased from Pacific Gas & Electric. In addition, the District hopes to gain and own renewable energy credit, as well as reduce carbon emissions. Staff has requested quotes from Cal Solar, Sunlight Electi-Cal Solutions and Kingdom Solar, which has not been received as of the posting of this agenda.

FISCAL IMPACTS

Funds have been designated in the capital improvement account for solar.

ATTACHMENTS

1. Cal Solar Quote
2. Sunlight Electri-Cal Solutions Quote

Tracy Rural Fire

Prepared For

Tracy Rural Fire Department
209-834-7269
raychel.jackson@tracyruralfire.org

Prepared By

Jordan Jones
(209) 596-0350
jordan@calsolar.com

2/5/2023

The Energy Toolbase provides comprehensive cost analysis for commercial, municipal, and residential renewable energy projects. We provide the tools that professionals need to compete in the fast paced renewable energy market by leveraging our first hand experience developing energy projects. Our software developers are NABCEP certified energy professionals and have completed energy analysis for companies including the Mirage Casino Resorts, Boston Scientific, Leviton, Balfour Beatty Construction, and many others.

Table of Contents

1 Project Summary ---- 3

2 Project Details ---- 4

2.1 Meter #1009710725 ---- 4

2.1.1 PV System Details ---- 4

2.1.2 Rebates and Incentives ---- 5

2.1.3 Utility Rates ---- 6

2.1.4 Current Electric Bill ---- 6

2.1.5 New Electric Bill ---- 7

3 Cash Flow Analysis ---- 8

3.1 Cash Purchase ---- 8

1 Project Summary

Payment Options	Cash Purchase
IRR - Term	16.3%
LCOE PV Generation	$0.079 /kWh
Net Present Value	$685,499
Payback Period	6.8 Years
Total Payments	$170,100
Total Incentives	$51,030
Net Payments	$119,070
Electric Bill Savings - Term	$967,891
Upfront Payment	$170,100

Combined Solar PV Rating
Power Rating: 34,020 W-DC
Power Rating: 31,443 W-AC-CEC

2.1.1 PV System Details

General Information
Facility: Meter #1009710725
Address: 1400 Durham Ferry Rd Tracy CA 95304

Solar PV Equipment Description
Solar Panels: (84) REC Solar REC405AA Pure
Inverters: (84) Enphase Energy IQ8PLUS-72-2-US

Solar PV Equipment Typical Lifespan
Solar Panels: Greater than 30 Years
Inverters: 25 Years

Solar PV System Cost and Incentives	
Solar PV System Cost	$170,100
Direct pay - 30% ITC	-$51,030
Net Solar PV System Cost	**$119,070**

Solar PV System Rating
Power Rating: 34,020 W-DC
Power Rating: 31,443 W-AC-CEC

Energy Consumption Mix
Annual Energy Use: 48,501 kWh

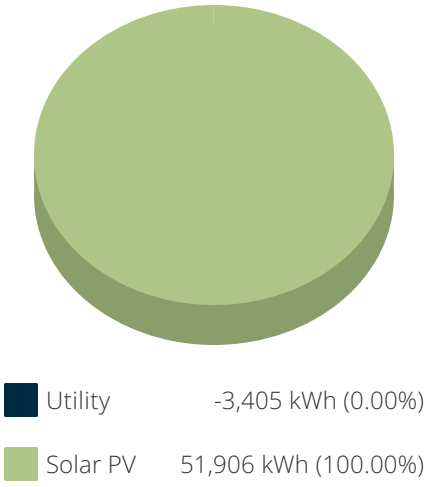

Monthly Energy Use vs Solar Generation

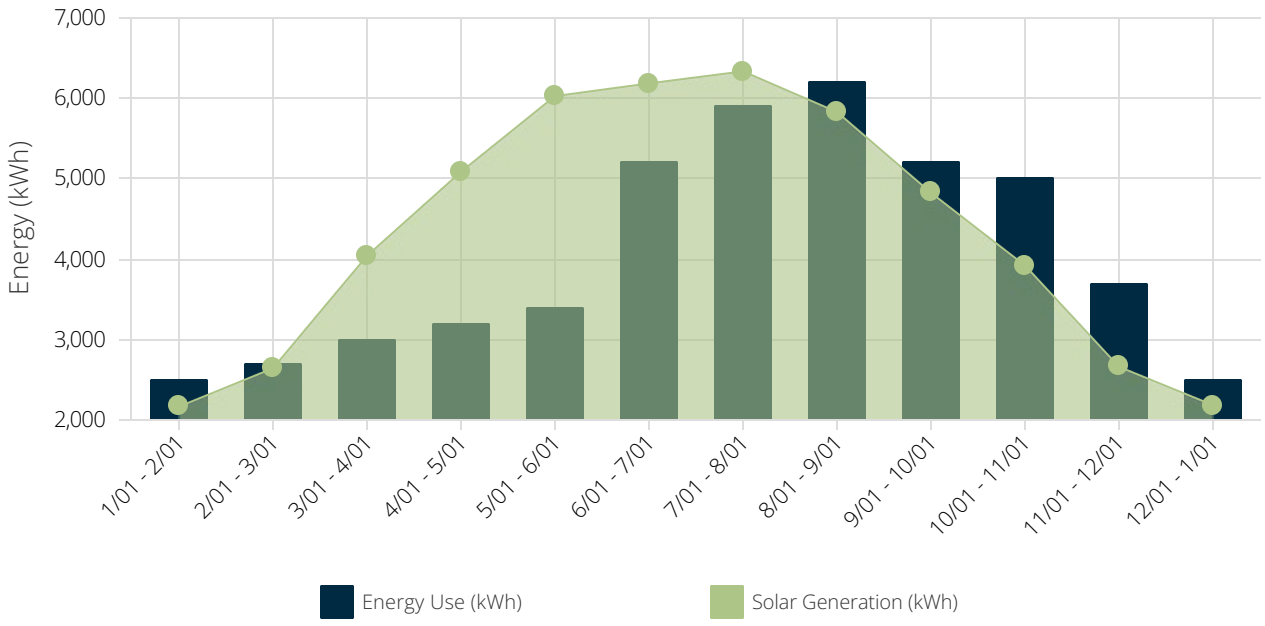

2.1.2 Rebates and Incentives

This section summarizes all incentives available for this project. The actual rebate and incentive amounts for this project are shown in each example.

Direct Pay, Investment Tax Credit (ITC) - 30%

The Inflation Reduction Act (IRA) of 2022 contains a "direct pay" provision that enables certain tax-exempt customers, including state and local government, to receive a direct cash payment in lieu of an investment tax credit (ITC). Entities that qualify for direct pay are eligible to receive a 30% direct payment, assuming they meet the IRA established prevailing wage and apprenticeship requirements in order to qualify for the full 30% “increased rate”, rather than a 6% “base rate”. The IRA states that direct pay is only available for entities, including: an entity exempt from the tax, any State government (or political subdivision thereof), the Tennessee Valley Authority, an Indian tribal government, an Alaska Native Corporation, any corporation operating on a cooperative basis which is engaged in furnishing electric energy to persons in rural areas. These entities may take direct pay for solar and storage in the ITC and PTC as well as the ITC/PTC when tech neutral starts after 2025.

Total Incentive Value: $51,030

2.1.3 Utility Rates

The table below shows the rates associate with your current utility rate schedule (B-1). Your estimated electric bills after solar are shown on the following page.

Customer Charges				Energy Charges			
Season	Charge Type	Rate Type	B-1	Season	Charge Type	Rate Type	B-1
W1	Flat Rate	per day	$0.82	W1	On Peak	Import	$0.32329
W2	Flat Rate	per day	$0.82	W1	Off Peak	Import	$0.30718
S	Flat Rate	per day	$0.82	W2	On Peak	Import	$0.32329
				W2	Off Peak	Import	$0.30718
				W2	Super Off Peak	Import	$0.29076
				S	On Peak	Import	$0.39871
				S	Part Peak	Import	$0.34948
				S	Off Peak	Import	$0.32868

2.1.4 Current Electric Bill

The table below shows your annual electricity costs based on the most current utility rates and your previous 12 months of electrical usage.

Rate Schedule: PG&E - B-1

Time Periods	Energy Use (kWh)				Charges			
Bill Ranges & Seasons	On Peak	Part Peak	Off Peak	Super Off Peak	Other	NBC	Energy	Total
1/1/2022 - 2/1/2022 W1	460	-	2,040	-	$25	$73	$703	$801
2/1/2022 - 3/1/2022 W1	478	-	2,222	-	$23	$78	$759	$860
3/1/2022 - 4/1/2022 W2	482	-	1,443	1,075	$25	$87	$825	$937
4/1/2022 - 5/1/2022 W2	496	-	1,547	1,158	$25	$93	$879	$997
5/1/2022 - 6/1/2022 W2	533	-	1,641	1,227	$25	$99	$934	$1,059
6/1/2022 - 7/1/2022 S	942	1,083	3,175	-	$25	$151	$1,647	$1,822
7/1/2022 - 8/1/2022 S	1,046	1,227	3,627	-	$25	$171	$1,867	$2,063
8/1/2022 - 9/1/2022 S	1,138	1,282	3,780	-	$25	$180	$1,964	$2,170
9/1/2022 - 10/1/2022 S	903	1,047	3,249	-	$25	$151	$1,643	$1,818
10/1/2022 - 11/1/2022 W1	858	-	4,142	-	$25	$145	$1,405	$1,575
11/1/2022 - 12/1/2022 W1	694	-	3,006	-	$25	$107	$1,040	$1,172
12/1/2022 - 1/1/2023 W1	471	-	2,029	-	$25	$73	$703	$801
Total	8,501	4,639	31,901	3,460	$300	$1,408	$14,368	$16,076

2.1.5 New Electric Bill

Rate Schedule: PG&E - B-1

Time Periods	Energy Use (kWh)				Charges			
Bill Ranges & Seasons	On Peak	Part Peak	Off Peak	Super Off Peak	Other	NBC	Energy	Total
1/1/2022 - 2/1/2022 W1	335	-	-1	-	$25	$46	$98	$170
2/1/2022 - 3/1/2022 W1	250	-	-193	-	$23	$45	$20	$88
3/1/2022 - 4/1/2022 W2	-213	-	296	-1,124	$25	$40	$275	$209
4/1/2022 - 5/1/2022 W2	-568	-	89	-1,407	$25	$37	$510	$449
5/1/2022 - 6/1/2022 W2	-861	-	-70	-1,696	$25	$35	$717	$656
6/1/2022 - 7/1/2022 S	-563	-328	-95	-	$25	$64	$342	$253
7/1/2022 - 8/1/2022 S	-578	-208	351	-	$25	$75	$175	$75
8/1/2022 - 9/1/2022 S	-253	-115	738	-	$25	$83	$90	$199
9/1/2022 - 10/1/2022 S	-56	-175	605	-	$25	$73	$105	$202
10/1/2022 - 11/1/2022 W1	264	-	816	-	$25	$81	$305	$411
11/1/2022 - 12/1/2022 W1	548	-	492	-	$25	$65	$298	$388
12/1/2022 - 1/1/2023 W1	391	-	-75	-	$25	$46	$94	$166
Total	-1,304	-826	2,953	-4,227	$300	$691	$170	$820

Annual Electricity Savings: $15,256

3.1 Cash Purchase

Assumptions and Key Financial Metrics

IRR - Term	16.3%	Net Present Value	$685,499	Payback Period	6.8 Years
ROI	499.0%	PV Degradation Rate	0.25%	Discount Rate	1.0%
Energy Cost Escalation Rate	5.0%	Federal Income Tax Rate	0.0%	State Income Tax Rate	0.0%
Total Project Costs	$170,100				

Years	Project Costs	Direct pay - 30% ITC	Electric Bill Savings	Total Cash Flow	Cumulative Cash Flow
Upfront	-$170,100	-	-	-$170,100	-$170,100
1	-	$51,030	$15,256	$66,286	-$103,814
2	-	-	$15,979	$15,979	-$87,836
3	-	-	$16,735	$16,735	-$71,100
4	-	-	$17,528	$17,528	-$53,572
5	-	-	$18,358	$18,358	-$35,214
6	-	-	$19,227	$19,227	-$15,987
7	-	-	$20,138	$20,138	$4,151
8	-	-	$21,091	$21,091	$25,242
9	-	-	$22,089	$22,089	$47,331
10	-	-	$23,134	$23,134	$70,465
11	-	-	$24,229	$24,229	$94,694
12	-	-	$25,375	$25,375	$120,069
13	-	-	$26,575	$26,575	$146,645
14	-	-	$27,832	$27,832	$174,477
15	-	-	$29,148	$29,148	$203,625
16	-	-	$30,526	$30,526	$234,152
17	-	-	$31,970	$31,970	$266,121
18	-	-	$33,481	$33,481	$299,602
19	-	-	$35,063	$35,063	$334,665
20	-	-	$36,720	$36,720	$371,384
21	-	-	$38,454	$38,454	$409,839
22	-	-	$40,271	$40,271	$450,109
23	-	-	$42,173	$42,173	$492,282
24	-	-	$44,164	$44,164	$536,447
25	-	-	$46,250	$46,250	$582,696
26	-	-	$48,433	$48,433	$631,129
27	-	-	$50,719	$50,719	$681,848
28	-	-	$53,112	$53,112	$734,960
29	-	-	$55,619	$55,619	$790,579
30	-	-	$58,242	$58,242	$848,821
Totals:	-$170,100	$51,030	$967,891	$848,821	-

Sunlight
Electri-Cal
SOLUTIONS

Prepared by: Juan Meza
2096402022
gosolar@sunlightelectri-cal.solutions

For: Tracy Rural County Fire Protection District
1400 Durham Ferry Rd, Tracy

Quote #: 925962
Valid until: Jun 13 2023

Solar Energy System Proposal

Dear Tracy Rural County Fire Protection District,

Thank you for the opportunity to present your Solar Energy System Proposal.

Best Regards,
Juan Meza
Sunlight Electri-Cal Solutions

At Sunlight Electri-Cal Solutions, we are dedicated to ensuring that our customers receive the personal attention they deserve as we recognize that each customer has specific needs, and our purpose is to understand and address those needs. We anticipate that our customers will find working with Sunlight Electri-Cal Solutions to be a pleasant and productive experience. The relationships that we build with our customers are of the utmost importance; we know that as we develop energy efficiency and knowledge together, we are better able to deliver products tailored to our customers' specific requirements.

Recommended System Option

120%	$358,750	$95,312	$263,438
Consumption Offset	Lifetime Electricity Bill Savings	Net Cost of this solar system	Estimated net savings over system lifetime

System Hardware

Solar Panels

Canadian Solar
36.800 kW Total Solar Power
92 x 400 Watt Panels (CS3N-400MS)
61,160 kWh per year

ATH-01-M1

Simple, Adjustable Tile Roof Attachment
Adaptable QuickMount® Tile Replacement Flashing
25 Year Warranty

IRONRIDGE

IQ7X-96-2-US

Enphase Energy Inc.
28.980 kW Total Inverter Rating
92 x IQ7X-96-2-US [240V]

ENPHASE.

XR-100-168A

10' spanning capability
Heavy load capability
Corrosion-Resistant Materials

IRONRIDGE

Warranties: 12 Year Panel Product Warranty, 25 Year Panel Performance Warranty, 25 Year Inverter Product Warranty

System Performance

120%
Energy From Solar

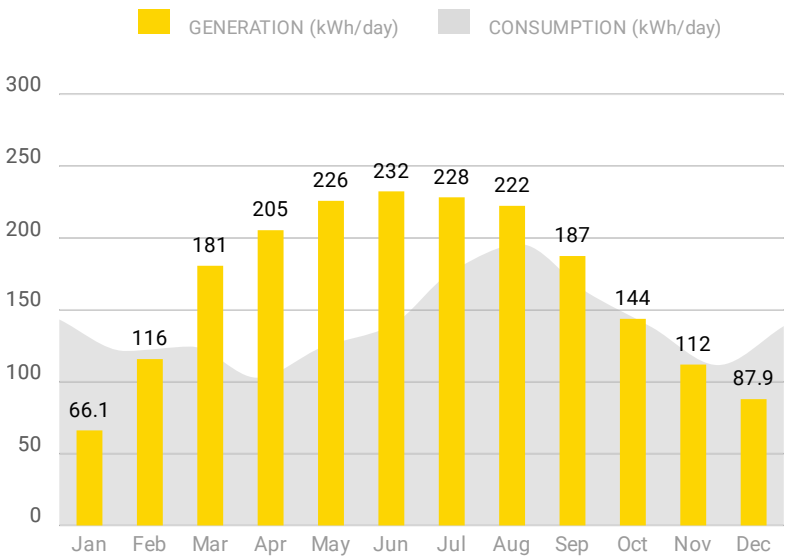

System Performance Assumptions: System Total losses: 15.9%, Inverter losses: 2.5%, Optimizer losses: 0%, Shading losses: 0%, Performance Adjustment: 0%, Output Calculator: System Advisor Model 2020.02.29.r2. Panel Orientations: 47 panels with Azimuth 180 and Slope 20, 45 panels with Azimuth 180 and Slope 20.

Environmental Benefits

Solar has no emissions. It just silently generates pure, clean energy.

Each Year		Over System Lifetime		
120%	12 tons	225,195	2,331	260
Of CO_2, SO_x & NO_x	Avoided CO_2 per year	Car miles avoided	Trees planted	Long haul flights avoided

How your system works

Generating Excess Solar

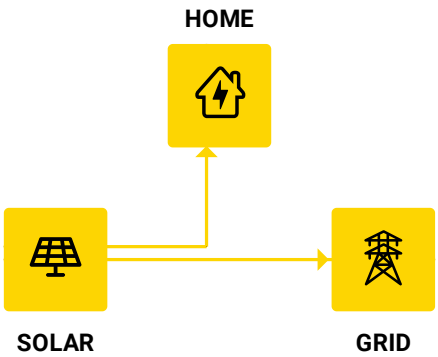

Partially Offset Usage

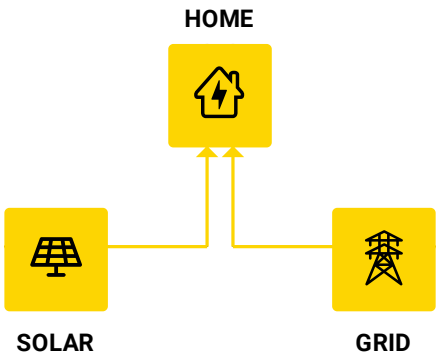

Night

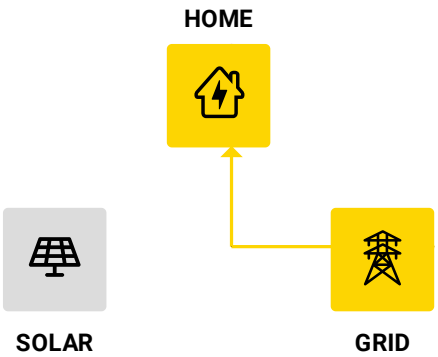

Electricity Bill Savings

First Year Monthly Bill Savings

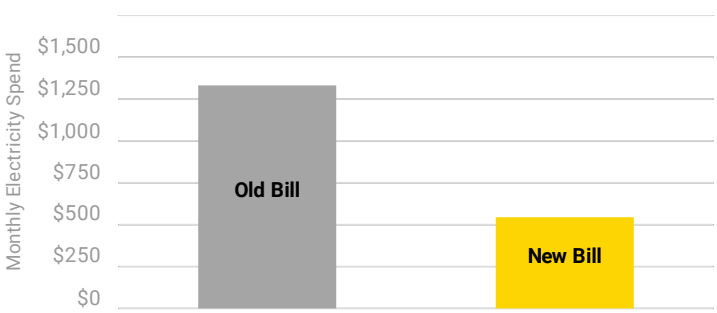

Lifetime Bill Savings

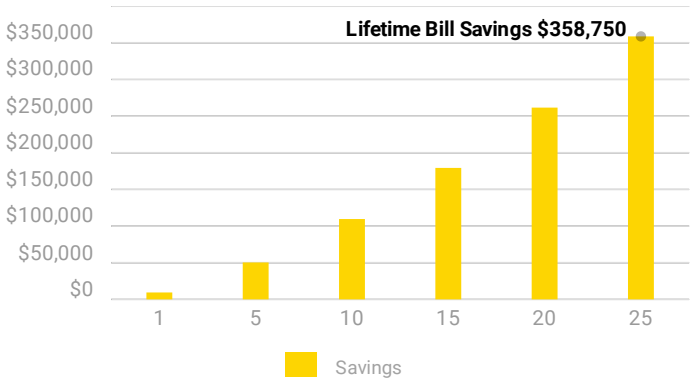

Month	Electricity Consumption (before solar)	Solar Generation	Utility Bill (before solar)	Utility Bill (after solar)	Estimated Savings (from solar)
Jan	4,442 kWh	2,050 kWh	$1,287	$784	$504
Feb	3,399 kWh	3,241 kWh	$987	$458	$529
Mar	3,858 kWh	5,601 kWh	$1,119	$407	$713
Apr	3,084 kWh	6,162 kWh	$897	$365	$531
May	3,851 kWh	7,001 kWh	$1,117	$406	$711
Jun	4,141 kWh	6,973 kWh	$1,430	$679	$751
Jul	5,518 kWh	7,077 kWh	$1,903	$826	$1,076
Aug	6,066 kWh	6,893 kWh	$2,091	$891	$1,200
Sep	4,877 kWh	5,623 kWh	$1,682	$770	$912
Oct	4,272 kWh	4,456 kWh	$1,238	$432	$806
Nov	3,348 kWh	3,358 kWh	$973	$382	$590
Dec	4,299 kWh	2,724 kWh	$1,246	$127	$1,119

Your projected energy cost is calculated by considering a 3.5% increase in energy cost each year, due to trends in the raising cost of energy. This estimate is based on your selected preferences, current energy costs and the position and orientation of your roof to calculate the efficiency of the system. Projections are based on estimated usage of 51156 kWh per year, assuming Small General Service Electricity Tariff.

Your electricity tariff rates may change as a result of installing the system. You should contact your electricity retailer for further information.

Net Financial Impact Cash/Check

$358,750	-	$95,312	=	$263,438
Utility Bill Savings		Net System Cost		Estimated Net Savings

Cumulative Savings From Going Solar

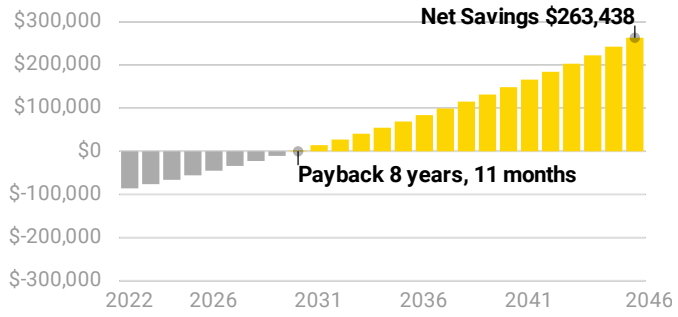

Annual Savings From Going Solar

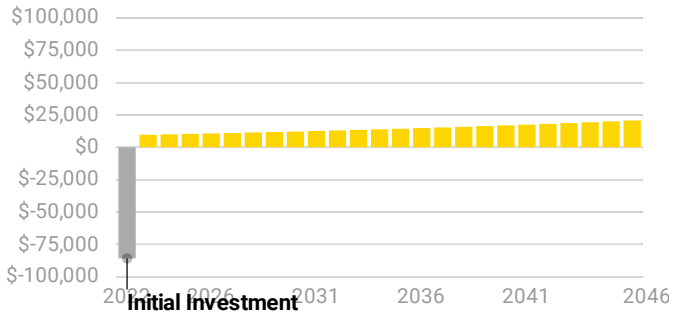

Estimates do not include replacement costs of equipment not covered by a warranty. Components may need replacement after their warranty period. Financial discount rate assumed: 6.75%

Quotation

Payment Option: Cash/Check

92 x CS3N-400MS 400 Watt Panels (Canadian Solar) 92 x IQ7X-96-2-US [240V] (Enphase Energy Inc.) 1 x ATH-01-M1, 47 x XR-100-168A	
Total System Price	$128,800.00
Purchase Price	**$128,800.00**

Additional Incentives

Federal Tax Credit (ITC) Federal Solar Tax Credit (ITC) Federal Tax Credit Disclosure: Tax credits are an estimated amount. As the purchaser and owner of a solar photovoltaic system, you may qualify for certain federal, state, local or other rebates, tax credits or incentives (collectively, "Incentives"). If you have any questions as to whether and when you qualify for any Incentives and the amount of such Incentives, please consult and discuss with your personal tax or financial advisor. Sunlight Electri-Cal Solutions make no representation, warranty or guaranty as to the availability or amount of such Incentives.	$33,488.00
Net System Cost	**$95,312.00**

Price excludes Retailer Smart Meter should you want us to install your Smart Meter it will be an additional cost.
This proposal is valid until Jun 13 2023.

OpenSolar

This proposal has been prepared by Sunlight Electri-Cal Solutions using tools or applications available from www.opensolar.com and is subject to the terms set out in the User Agreement. We suggest you review the terms of the User Agreement and our Privacy Policy (at http://www.opensolar.com/content/legal/).

Capitalised terms here have the same meaning as under the User Agreement, you means the individual (who is not also a User) who has received this sales proposal and OpenSolar / we / us / our means OpenSolar Pty Ltd ACN 621 679 632. Under the User Agreement, the User (which could be an installer, service provider, electrician etc who has provided you, the end customer, this sales proposal) has an obligation to obtain consent from its customers or clients to upload their User Content to the OpenSolar Site and warrants that they have explained to those customers or clients how their User Content may be used pursuant to the User Agreement.

Any tools, calculators, design platforms, results and output produced by the OpenSolar Sites (including this sales proposal) are estimates only, and we do not guarantee that these estimates will match actual measurements taken at a given site. We do not guarantee the accuracy or suitability of any engineering designs or plan-sets or customer proposals produced by the OpenSolar Sites, and no tool on or part of the OpenSolar Site shall be deemed a substitute for an actual in-person analysis conducted at a given site.

We make no representation, promise, guarantee or warranty about any cost savings, energy consumption savings or return on investment of any engineering designs or plan-sets or customer proposals produced by the OpenSolar Sites.

OpenSolar is not a party to any contract or agreement that you (as a customer) may have with a User or between Users.

The above statement does not apply to the CEC Approved Retailer (in Australia only) responsible for the sale of the solar PV system.

Enphase IQ 7X Microinverter

The high-powered smart grid-ready **Enphase IQ 7X Micro**™ dramatically simplifies the installation process while achieving the highest system efficiency for systems with 96-cell modules.

Part of the Enphase IQ System, the IQ 7X Micro integrates with the Enphase IQ Envoy™, Enphase IQ Battery™, and the Enphase Enlighten™ monitoring and analysis software.

The IQ Series Microinverters extend the reliability standards set forth by previous generations and undergo over a million hours of power-on testing, enabling Enphase to provide an industry-leading warranty of up to 25 years.

Easy to Install

- Lightweight and simple
- Faster installation with improved, lighter two-wire cabling
- Built-in rapid shutdown compliant (NEC 2014 & 2017)

Efficient and Reliable

- Optimized for high powered 96-cell* modules
- Highest CEC efficiency of 97.5%
- More than a million hours of testing
- Class II double-insulated enclosure
- UL listed

Smart Grid Ready

- Complies with advanced grid support, voltage and frequency ride-through requirements
- Remotely updates to respond to changing grid requirements
- Configurable for varying grid profiles
- Meets CA Rule 21 (UL 1741-SA)

* The IQ 7X is required to support 96-cell modules.

UL CERTIFIED
SAFETY US-CA
E341165

To learn more about Enphase offerings, visit **enphase.com**

ENPHASE.

Enphase IQ 7X Microinverter

INPUT DATA (DC)	IQ7X-96-2-US	
Commonly used module pairings[1]	320 W - 460 W +	
Module compatibility	96-cell PV modules	
Maximum input DC voltage	79.5 V	
Peak power tracking voltage	53 V - 64 V	
Operating range	25 V - 79.5 V	
Min/Max start voltage	33 V / 79.5 V	
Max DC short circuit current (module Isc)	10 A	
Overvoltage class DC port	II	
DC port backfeed current	0 A	
PV array configuration	1 x 1 ungrounded array; No additional DC side protection required; AC side protection requires max 20A per branch circuit	
OUTPUT DATA (AC)	**@ 240 VAC**	**@ 208 VAC**
Peak output power	320 VA	
Maximum continuous output power	315 VA	
Nominal (L-L) voltage/range[2]	240 V / 211-264 V	208 V / 183-229 V
Maximum continuous output current	1.31 A (240 VAC)	1.51 A (208 VAC)
Nominal frequency	60 Hz	
Extended frequency range	47 - 68 Hz	
AC short circuit fault current over 3 cycles	5.8 Arms	
Maximum units per 20 A (L-L) branch circuit[3]	12 (240 VAC)	10 (208 VAC)
Overvoltage class AC port	III	
AC port backfeed current	18 mA	
Power factor setting	1.0	
Power factor (adjustable)	0.85 leading ... 0.85 lagging	
EFFICIENCY	**@240 VAC**	**@208 VAC**
CEC weighted efficiency	97.5 %	97.0 %
MECHANICAL DATA		
Ambient temperature range	-40°C to +60°C	
Relative humidity range	4% to 100% (condensing)	
Connector type (IQ7X-96-2-US)	MC4 (or Amphenol H4 UTX with optional Q-DCC-5 adapter)	
Dimensions (WxHxD)	212 mm x 175 mm x 30.2 mm (without bracket)	
Weight	1.08 kg (2.38 lbs)	
Cooling	Natural convection - No fans	
Approved for wet locations	Yes	
Pollution degree	PD3	
Enclosure	Class II double-insulated, corrosion resistant polymeric enclosure	
Environmental category / UV exposure rating	NEMA Type 6 / outdoor	
FEATURES		
Communication	Power Line Communication (PLC)	
Monitoring	Enlighten Manager and MyEnlighten monitoring options Compatible with Enphase IQ Envoy	
Disconnecting means	The AC and DC connectors have been evaluated and approved by UL for use as the load-break disconnect required by NEC 690.	
Compliance	CA Rule 21 (UL 1741-SA) UL 62109-1, UL1741/IEEE1547, FCC Part 15 Class B, ICES-0003 Class B, CAN/CSA-C22.2 NO. 107.1-01 This product is UL Listed as PV Rapid Shut Down Equipment and conforms with NEC-2014 and NEC-2017 section 690.12 and C22.1-2015 Rule 64-218 Rapid Shutdown of PV Systems, for AC and DC conductors, when installed according manufacturer's instructions.	

1. No enforced DC/AC ratio. See the compatibility calculator at https://enphase.com/en-us/support/module-compatibility.
2. Nominal voltage range can be extended beyond nominal if required by the utility.
3. Limits may vary. Refer to local requirements to define the number of microinverters per branch in your area.

To learn more about Enphase offerings, visit **enphase.com**

ENPHASE.

© 2019 Enphase Energy. All rights reserved. All trademarks or brands used are the property of Enphase Energy, Inc.
2019-3-26

Cut Sheet

IRONRIDGE

XR100 Rail

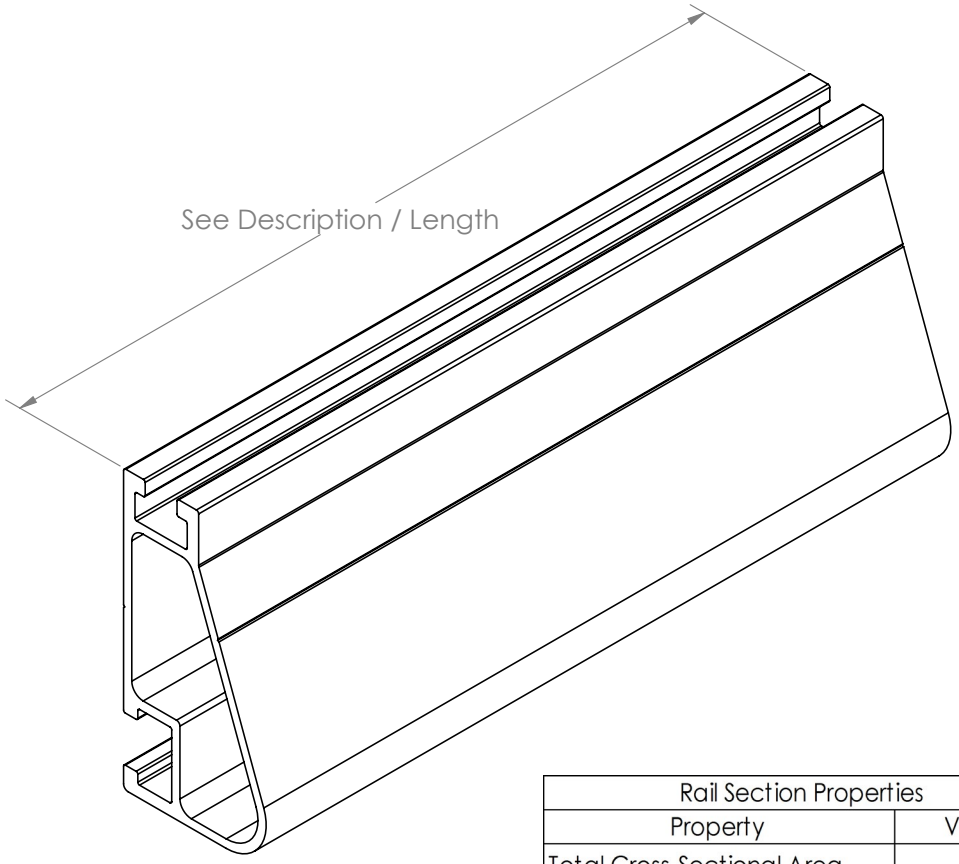

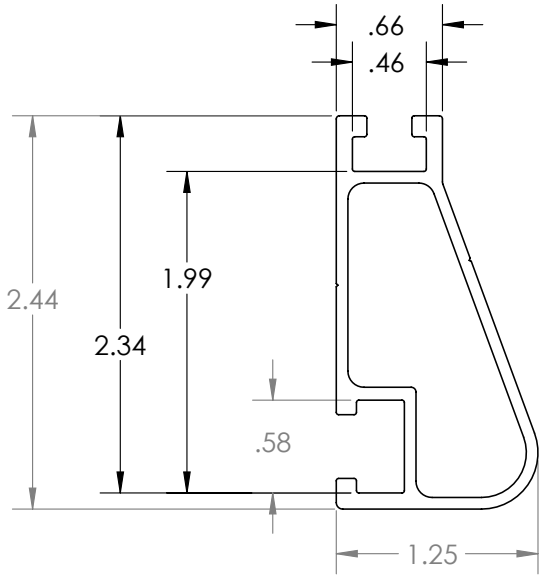

Rail Section Properties	
Property	Value
Total Cross-Sectional Area	0.582 in^2
Section Modulus (X-axis)	0.297 in^3
Moment of Inertia (X-axis)	0.390 in^4
Moment of Inertia (Y-axis)	0.085 in^4
Torsional Constant	0.214 in^3
Polar Moment of Inertia	0.126 in^4

APPROVED MATERIALS:
6005-T6, 6005A-T61, 6105-T5, 6N01-T6
(34,000 PSI YIELD STRENGTH MINIMUM)

Clear Part Number	Black Part Number	Description / Length	Material	Weight
XR-100-132A	XR-100-132B	XR100, Rail 132" (11 Feet)	6000-Series Aluminum	7.50 lbs.
XR-100-168A	XR-100-168B	XR100, Rail 168" (14 Feet)		9.55 lbs.
XR-100-204A	XR-100-204B	XR100, Rail 204" (17 Feet)		11.60 lbs.

v1.1

IRONRIDGE

All Tile Hook

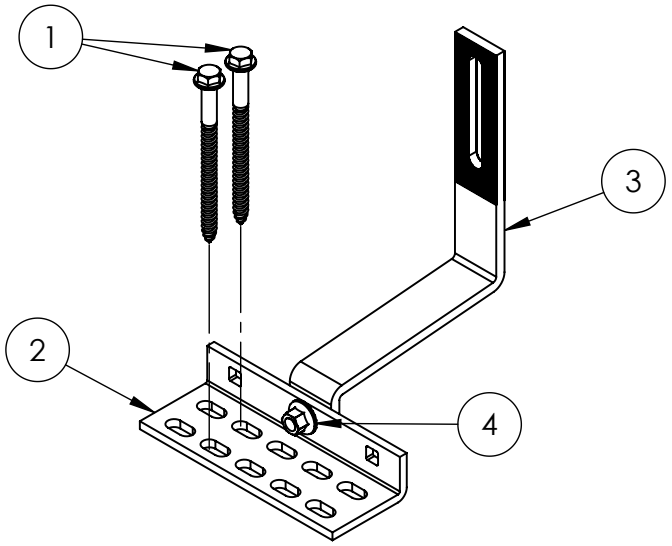

ITEM NO.	DESCRIPTION	QTY IN KIT
1	BOLT, LAG 5/16 X 4"	2
2	ASSY, BASE, CLEAR	1
3	ASSY, ARM, CLEAR	1
4	BOLT, CARRIAGE 5/16 X 1"	1

Part Number	Description
ATH-01-M1	All Tile Hook

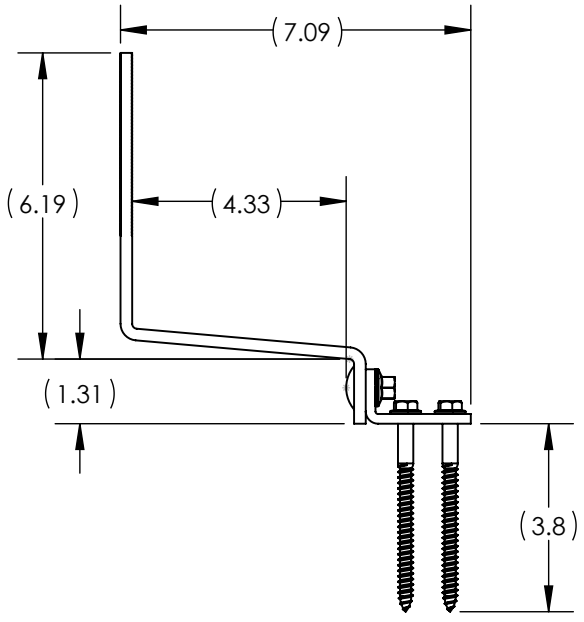

v1.0

1) Bolt Lag, 5/16 X 4"

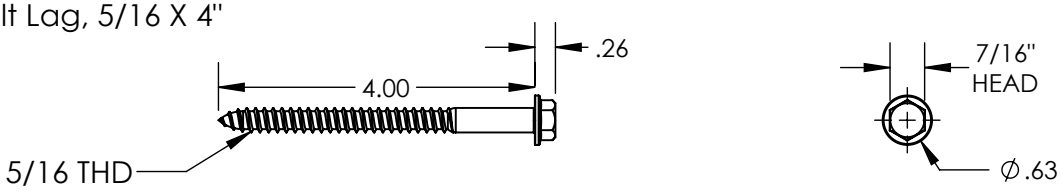

2) Bolt, Carriage 5/16 X 1"

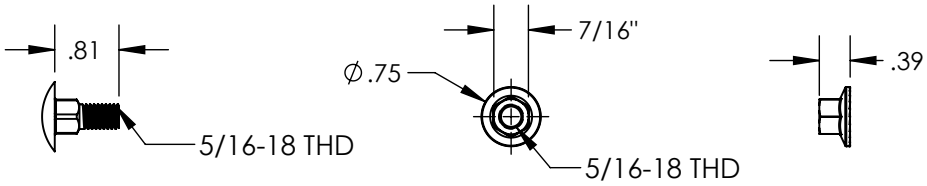

	Property	Value
Items 1 & 2	Material	300 Series Stainless Steel
	Finish	Clear

3) Base, Clear

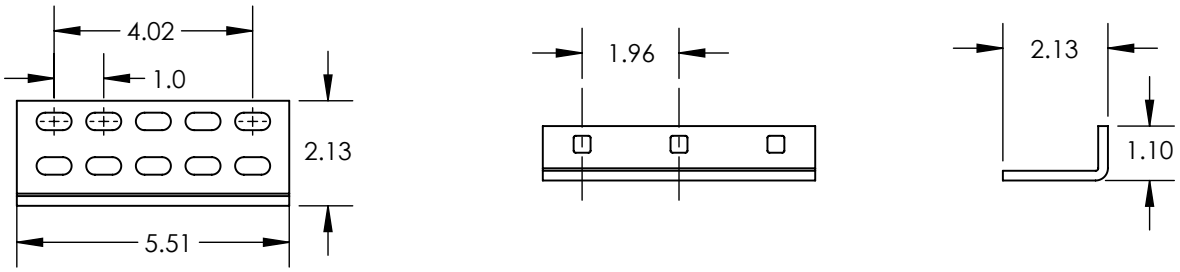

4) Arm, Clear

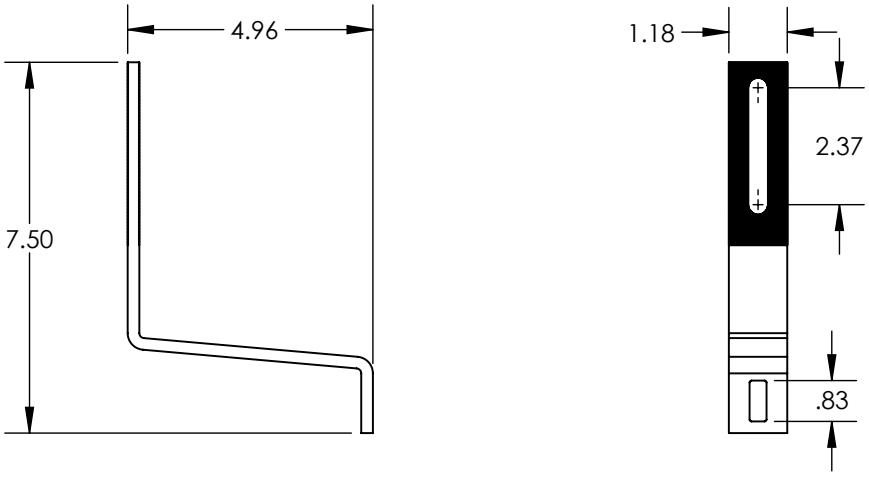

	Property	Value
Items 3 & 4	Material	300 Series Stainless Steel
	Finish	Clear